90000556/90000557 – Issue 9 10/15

AIRFLOW®

bpc Ventilation

DUPLEXVENT™

MODEL: DV72 R & L

Mechanical Ventilation with Heat Recovery
Installation Instructions and User Manual

Commissioning Data: to be completed by the installer				
Date of installation:				
Configuration	Left Hand		Right Hand	
Product Serial No:				

Important: This multi speed unit required Air Flow Rates to be adjusted when system is commissioned.

This manual must be kept by the householder

Index

General Information

To maintain a healthy indoor environment, closely controlled ventilation is essential. There are many pollutants that will affect the indoor air quality: human body waste products in the shape of CO_2, dead skin, perspiration and moisture. Add to this the waste products of cooking (cooking smells), showering (moisture), gases from building materials and the waste products of pets.

Without proper ventilation this would be the perfect environment for the growth of mould, subsequent damage to the decoration and fabric of a home and to the health of its occupants.

The Heat Recovery unit is fitted with two, low energy EC fans with a constant (100% adjustable) air volume.

The **exhaust fan** ensures that warm, damp and polluted air as near as possible to the source is extracted. The exhausted air has to be replaced with fresh air, so the heat recovery unit not only has an exhaust fan, but is also fitted with a **supply fan** and air filters.

The supply air, which in winter is colder than the inside air, is heated in the heat recovery unit using the heat of the exhaust air by means of the heat exchanger. This heat exchanger has a maximum efficiency of 91%, so a minimum loss of heat takes place and the supply air temperature enters the home at a comfortable level.

In exceptionally cold weather or winter conditions it is possible that the exchanger may freeze due to sub-zero, cold incoming air. Therefore the unit must be sited in a **frost-free** location. Alternatively, an in-duct heater may be used to protect the heat exchanger from freezing.

The filters in the unit ensure that the fresh supply air is clean as it enters the home. Also, the extract air from the property is filtered to protect the heat exchanger from unwanted contamination. These filters must be inspected regularly, initially every month, and cleaned. Each property will contaminate the filters at a different rate. The filters should be replaced annually or after a maximum of two cleaning cycles. Regular filter maintenance will ensure the integrity and performance of the unit.

The unit's condensate drain must be installed and connected to the household drainage system and must be insulated if installed outside the insulated envelope of the building

If the ductwork passes through an unheated area (loft or similar location), it must be insulated with an insulation material that complies with the latest Building Regulations.

DO NOT switch off the unit – it is designed to run continuously. If the unit is switched off, indoor pollutants and moisture levels may increase which could endanger your health or damage your home.

In the event of a power failure or the unit being turned off, restart the unit at High Speed. This MVHR unit has a soft start.

It is important to follow the advice in this user manual and correctly maintain the system to ensure a healthy indoor environment.

About The Unit

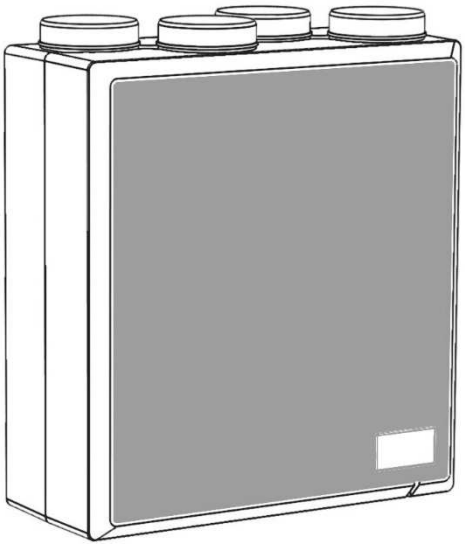

Duplexvent DV72 R & L are complete heat recovery units to ensure optimum efficiency for your home.

The units are supplied as left or right hand options. See page 11

Standard wall mounting kit is supplied with each unit. For fitting see page 9-12. Optional horizontal floor mounting is also available.
See pages 13-15

The units are supplied as standard with:
Frost protection, boost function, thermal bypass and remote commissioning panel.

EXPLODED VIEW

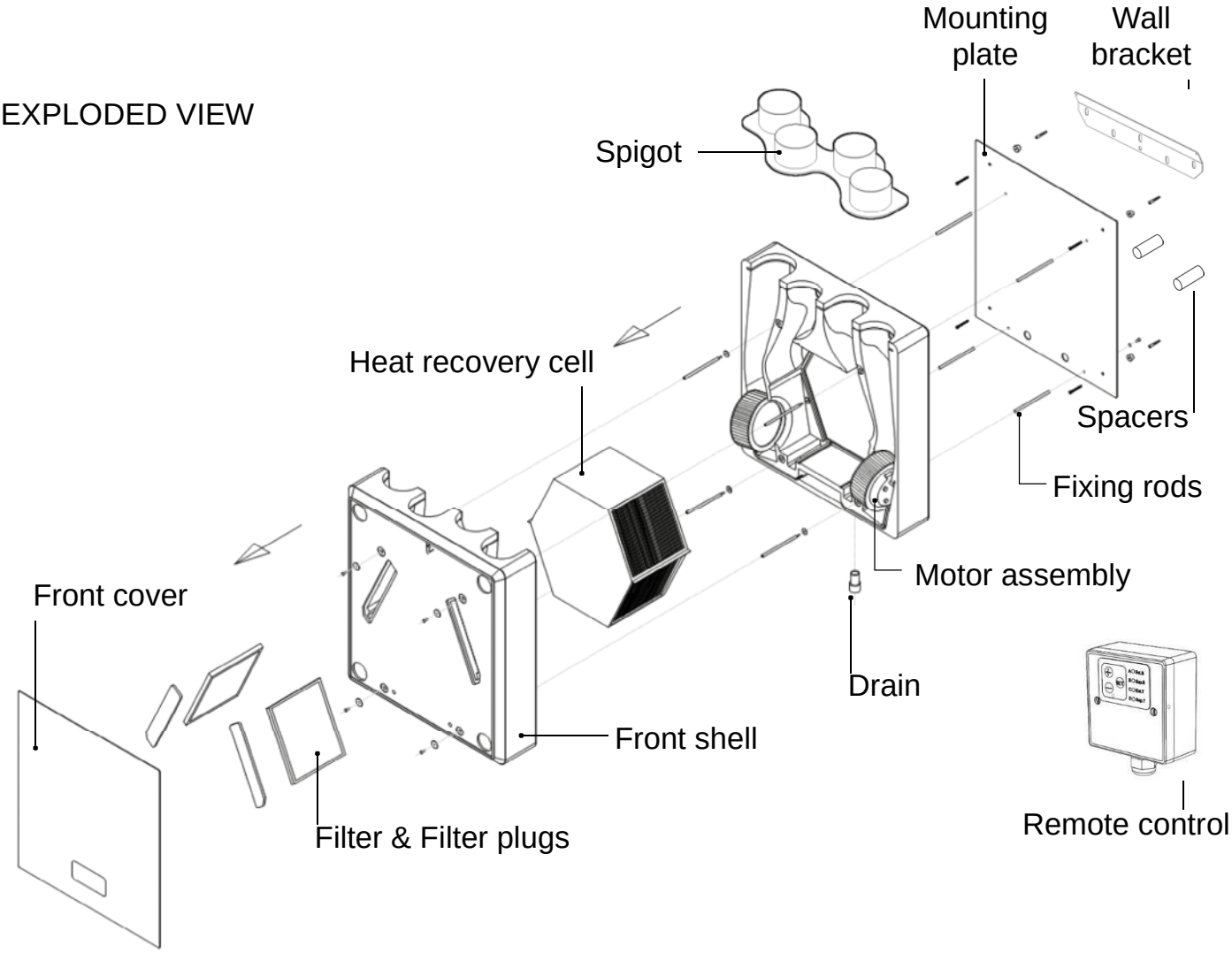

Wiring Diagram

Commissioning – Electrical connections.

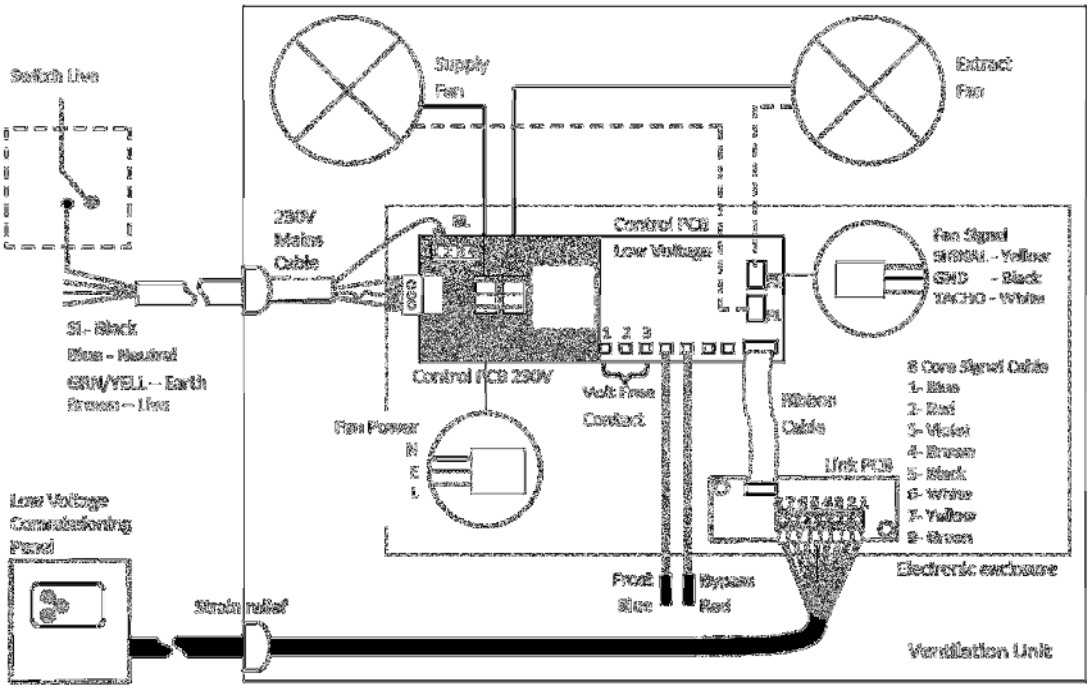

1. All wiring must conform to BS 7671 : Latest edition IEE wiring regulations.
2. This appliance is suitable for 230V~ 50Hz single phase supply fused at **3 amp**.
3. The appliance must be earthed and a double pole switch having a minimum contact separation of 3.0mm must be used to provide isolation for the unit.
4. The unit is supplied with a 1.5 meter long, 8 core cable for remote control connection. There is a risk that a longer cable may act as an aerial causing electronic interference problem to the unit. (8 Core Signal Cable – 0.22CSA – Non Shielded).

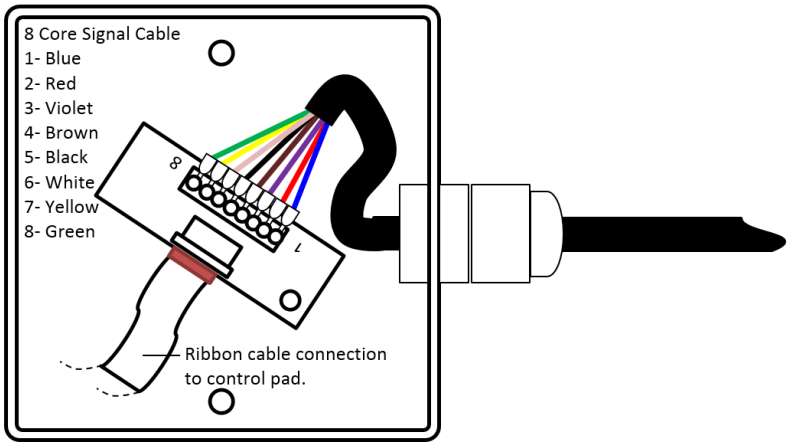

Remote Control Cable Connections.

5. Four core mains supply cable minimum size 0.75CSA.
6. Upon Installation the fans should be started in High Speed mode to ensure optimum performance of fans and then adjusted to the required continuous ventilation setting.
7. The remote controller **must not** be mounted above or within 1 meter of a cooker where it could be affected by excessive heat or moisture.

Emergency shutdown details - Unit to be isolated

Technical Specifications

Maximum Flow Rate	75 l/s (270m^3/h) MAX*	Protection Class	IPX2
Heat Exchanger	Counter Flow (Plastic) Thermal Efficiency ≤91%	Supply Filter Extract Filter	G3 G3
Fans	EC (Electronically Commutated DC)	Spigot Ø	125mm
Electrical Supply	230V/1PH/50Hz	Dimensions	560 x 635 x 260mm
Max Power Consumption	140W	Weight	14kg

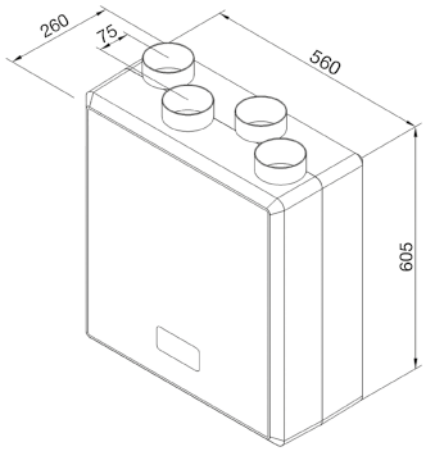

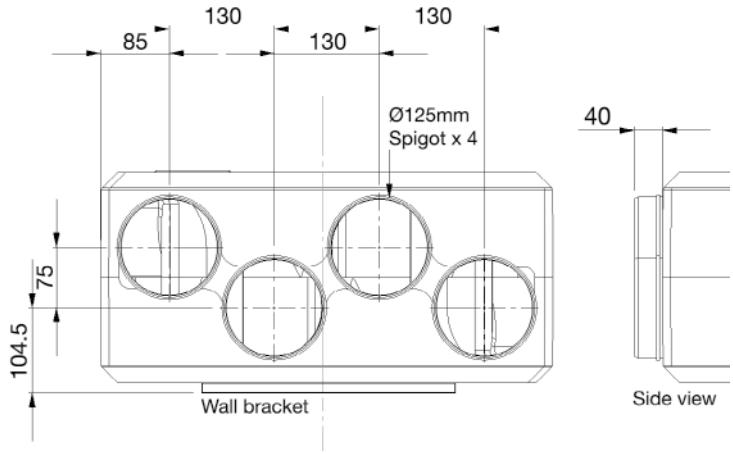

Duplexvent Static Pressure - Airflow

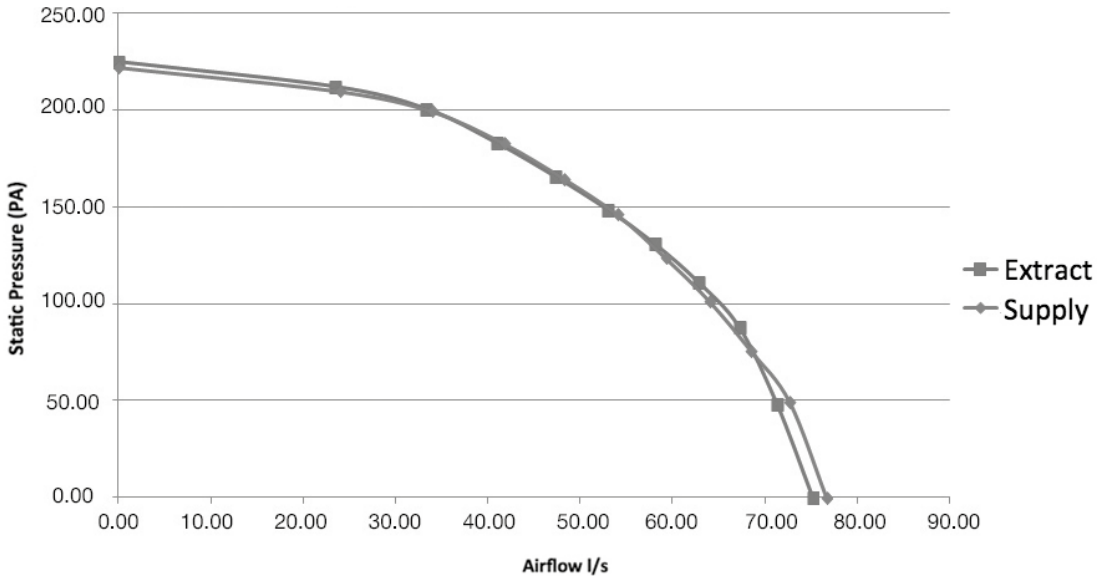

Installation Instructions

IMPORTANT

Be sure to have read and understood these instructions before beginning the installation process.

PRE-INSTALLATION CHECK LIST

Make sure that the unit can physically fit in to the desired location.

The Duplexvent unit should be situated so that access for maintenance or replacement of parts and filters is possible.

The Duplexvent unit is suitable for conventional rigid ducting or low energy radial duct system – Airflow Development Airflex Pro system. If using conventional ducting ensure duct runs are as short as possible, having the most direct route and using as few bends as possible. This is to reduce system pressure.

SAFETY AND RECOMMENDATIONS

- All wiring must comply with Building Regulations and the current I.E.E. Wiring Regulations (BS7671) or the equivalent standards for your country. The final installation should be examined and tested by a qualified electrician.
- Precautions must be taken to avoid the back-flow of gases into the dwelling from the open flue of gas or other fuel-burning appliances.
- Make sure the mains supply complies with the rating label for voltage, frequency and phase.
- Children shall not play with the appliance. Cleaning and user maintenance shall not be made by children without supervision.
- If any cables are damaged they must be replaced by the manufacturer, its service agent or similarly qualified persons

Installation Instructions

Control Options

Frost Protection

When the cell temperature in the unit falls below 3ºC the unit automatically warms the cell with extracted air to prevent the formation of frost.

Boost - Switched Live

The unit comes with Switched Live as standard. It is an automatic function, sending the unit to boost when the bathroom or kitchen light is on, or boost switch is activated.

Summer Bypass

The summer bypass helps reduce the air temperature coming into the dwelling during the summer months. It is an automatic function and operates when the supply air temperature to the property is above 25ºC.

Control Options	
Frost Protection	✓
Boost Switched Live	✓
Thermal Bypass	✓

Installation Instructions

FIRST FIX - Installing ductwork and electrical supply

Important note: This unit is for wall or floor mount only. Ceiling mounting unit are configured differently and should be ordered separately.

1. Locate external terminations (supply and extract) in accordance with the latest addition of the Domestic Ventilation Compliance Guide.
2. Ductwork from the unit is Ø125mm dia. - maximise duct size where possible. Make sure that the ductwork is insulated in unheated spaces. Minimise flexible duct.
3. Locate the mains supply within 1m of the location of unit. The position of the electrical power supply or unit (a fused switched isolator) must not be mounted above or closer than 1m to a cooker where it could be affected by excessive heat or moisture.
4. Make sure that there is room for the MVHR unit. The unit is designed to be wall mounted. It can also be floor mounted with an additional kit. Part number 90000558
5. Also make sure that there is a free space at the front of the appliance for cleaning the filter and carrying out maintenance on the appliance.

Ducting Configuration
See page 11-15 for duct connections to the unit/air flow directions

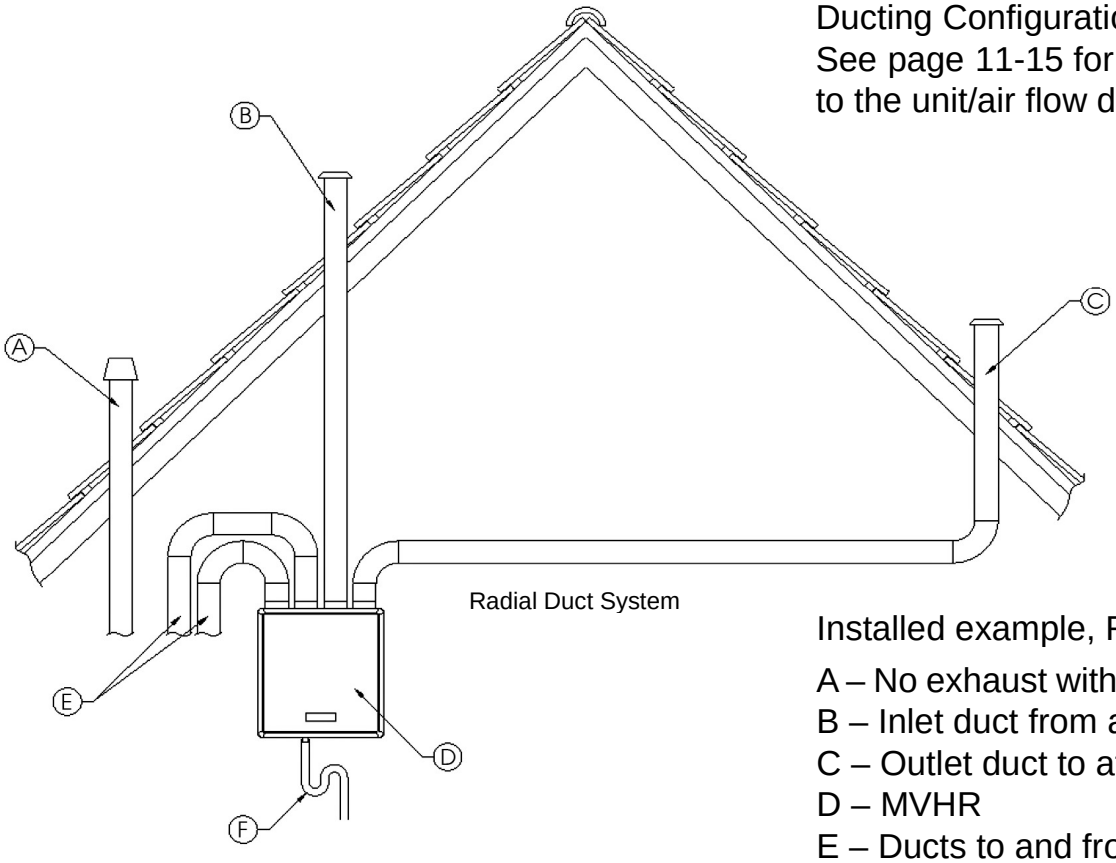

Installed example, RH unit shown.

A – No exhaust within 2m of air inlet
B – Inlet duct from atmosphere
C – Outlet duct to atmosphere
D – MVHR
E – Ducts to and from property
F – Condense Drain

Note: Important – if installed in a loft space the area should be within the insulated envelope to maintain optimum performance

Installation Instructions

SECOND FIX – Installing Vertically Hung unit

1. Attach the wall bracket to a flat stable surface that is capable of bearing the unit's weight, 12Kg. Ensure that the bracket is positioned so that there is enough space for the condensate drain and ducts to be connected. Fixing kit provided.

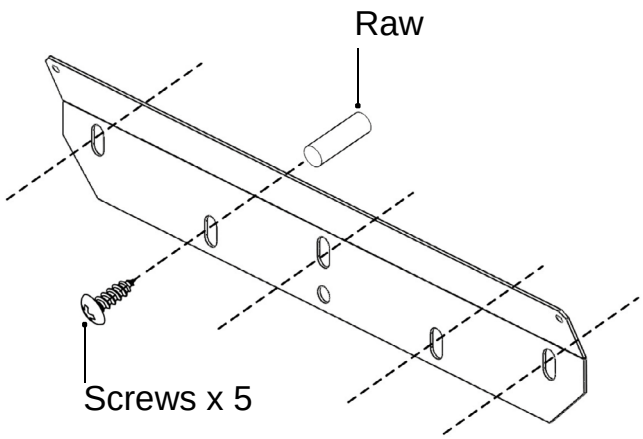

2. Attach spacers x 2 with screws provided. The spacers ensure that the unit tilts forward to improve drainage. Use the tie down cable if required to secured the bottom of the unit.

Anti – Vibration Mount

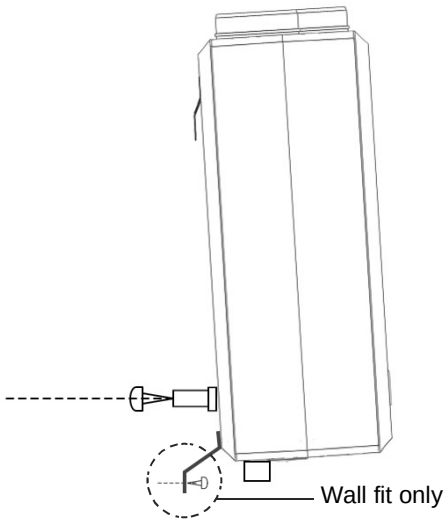

3. Slide the unit onto the wall bracket and attach ducting and drain.

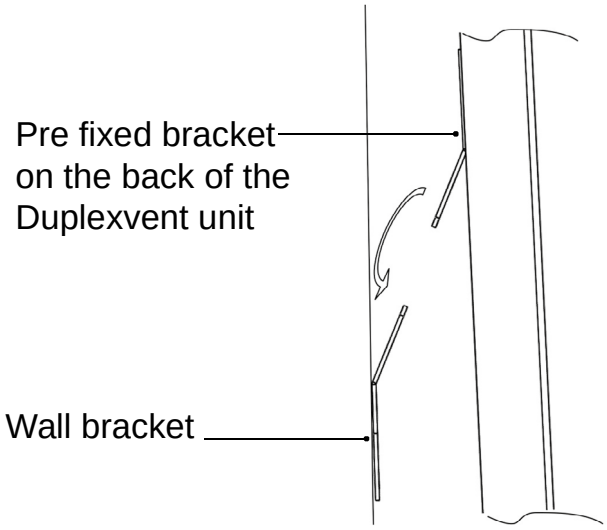

Connect 22mm PVC drain fitting

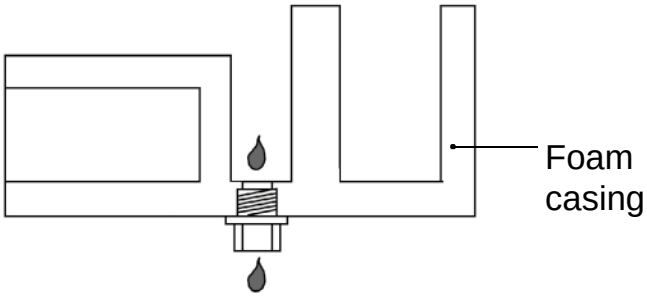

4. The drainage from the unit may be connected to an internal waste water system or soil pipe with an appropriate non-return device. One way valve device is recommended. Insulate pipes in an unheated loft space.

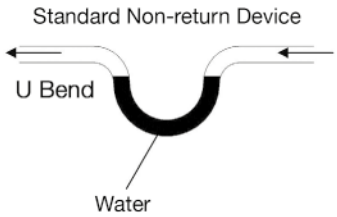

Installation Instructions

SECOND FIX – installing Vertically Hung Unit

Airflow and drain fitting - LH

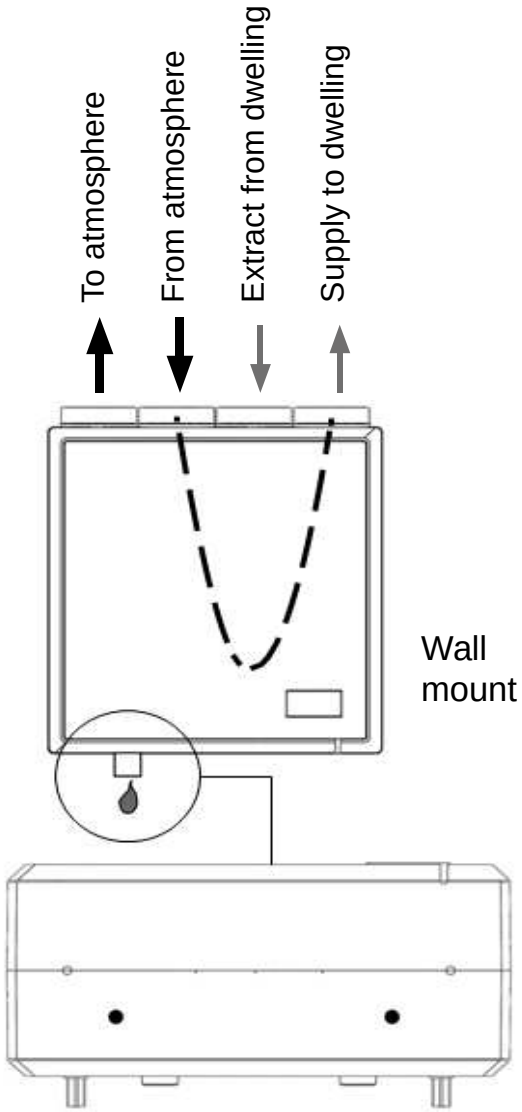

Airflow and drain fitting - RH

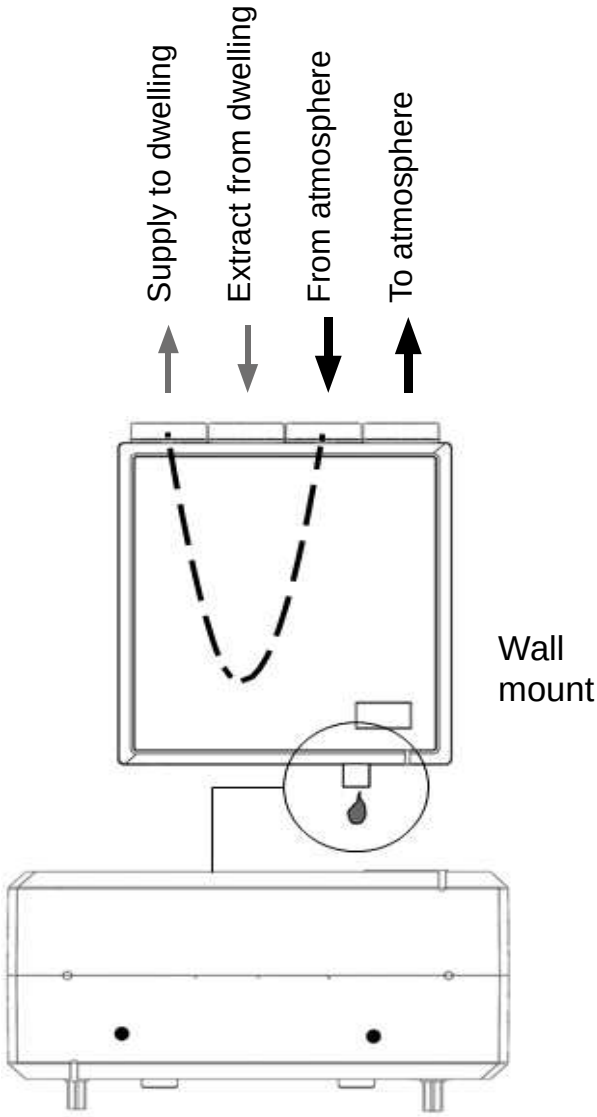

Drains are factory fitted. The units has either a LH or RH drain.

Wall mounting bracket dimensions

Please note that there is only one loose bracket with the two tab bracket factory fitted.

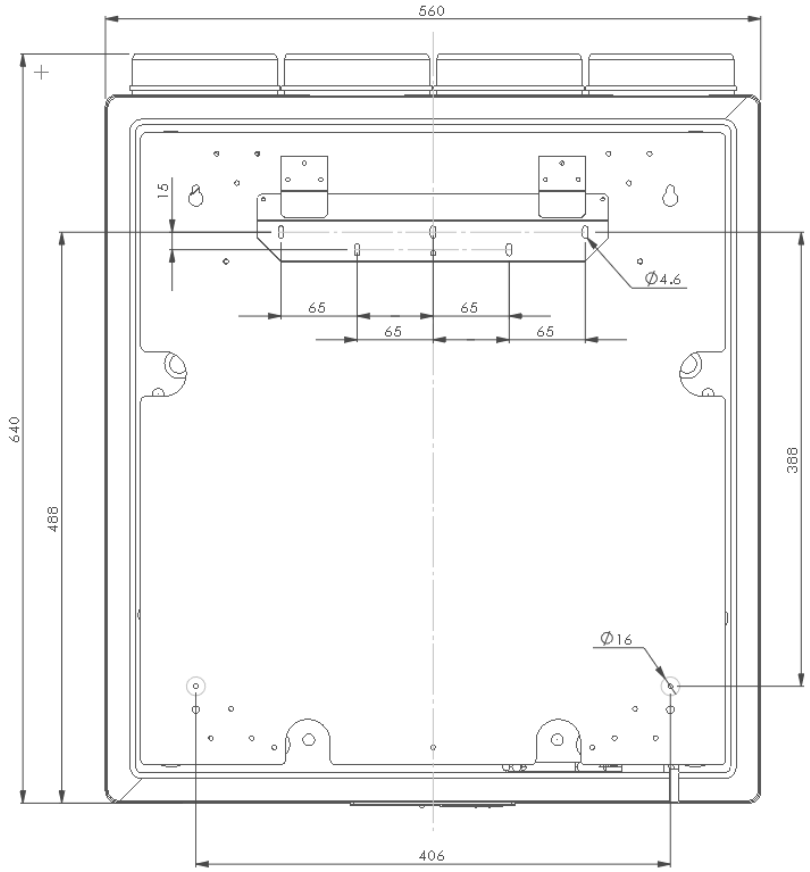

Picture of “Tie Down Cable”.

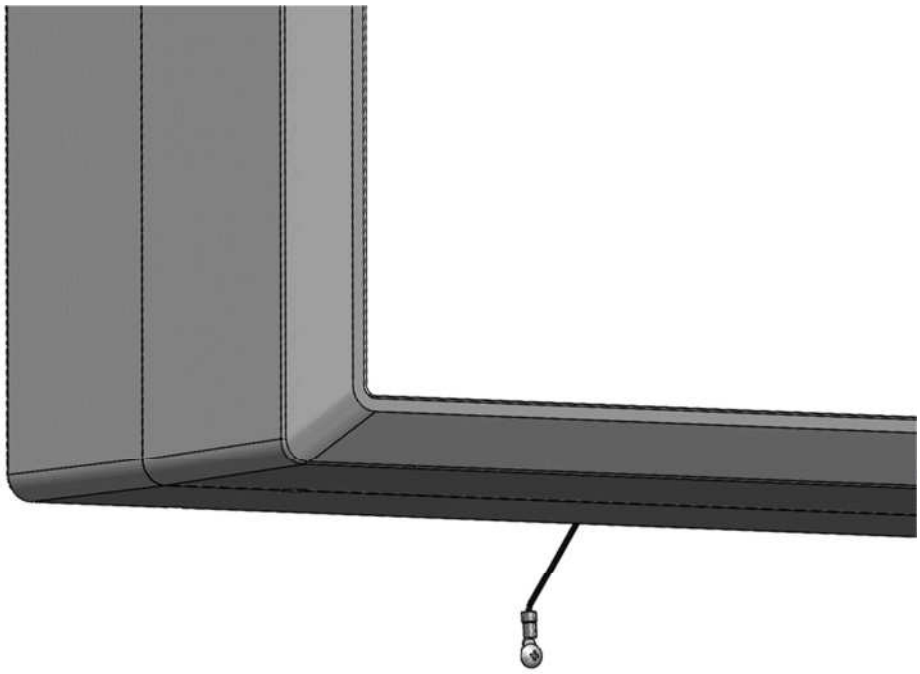

Horizontal mounting bracket dimensions

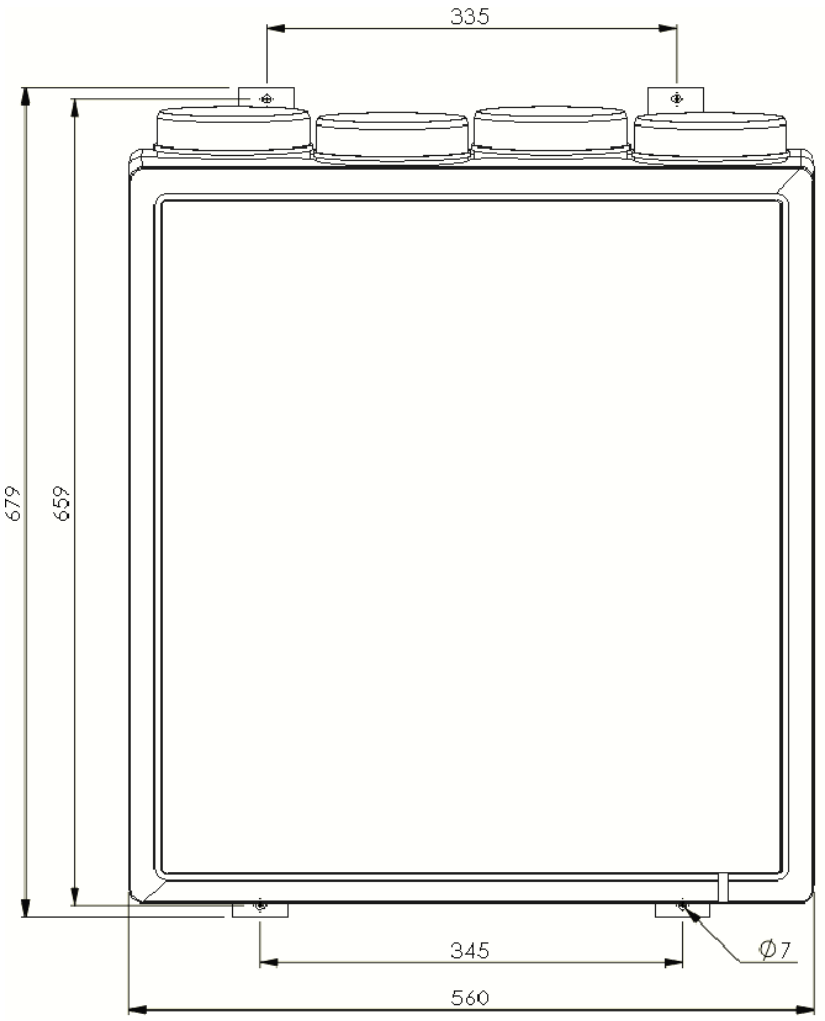

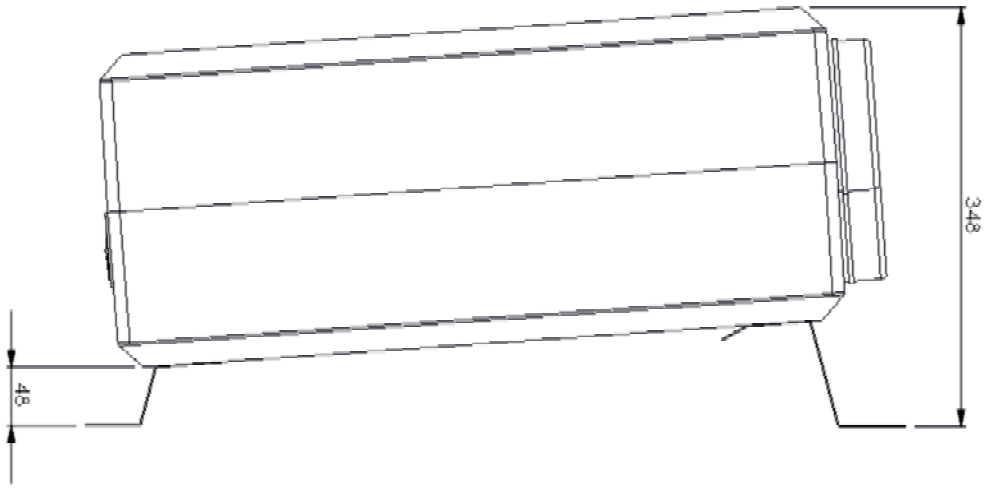

Installation Instructions

SECOND FIX – Installing Horizontal Mounted Unit

Connect 22mm PVC drain fitting

Floor mounting

5. The unit can be floor mounted by using the horizontal mounting kit,
   Part Number 90000558
   Use the long and short S brackets provided along with short fitting screws to ensure correct drainage. The unit must be higher at the duct end.
   Bracket fixing position. See Page 13

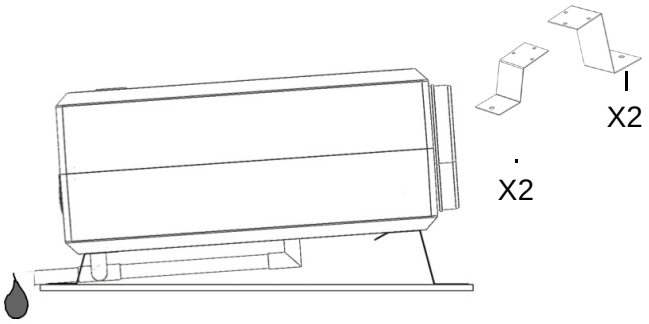

Drain connections should be solvent welded as here. The center Tee section is reversed to make either LH or RH drain. Push in the drain fitting and seal as appropriate to create a watertight assembly.

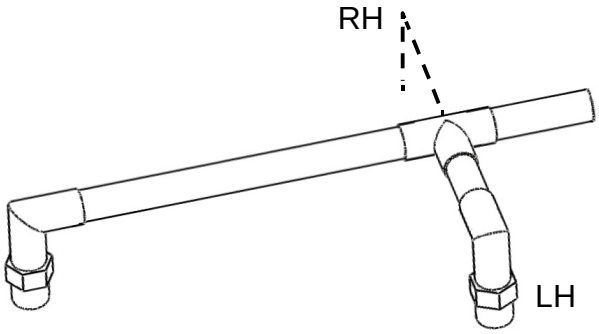

Important note: The floor mounted drain must be fitted on the same side as the factory fitted drain. This unit is for wall or floor mount only. Ceiling mounting units are configured differently and should be ordered separately.

6. Mount the remote control near the unit. Fix securely to a flat surface. For maintenance please ensure the remote control is disconnected before removing the unit from the wall.

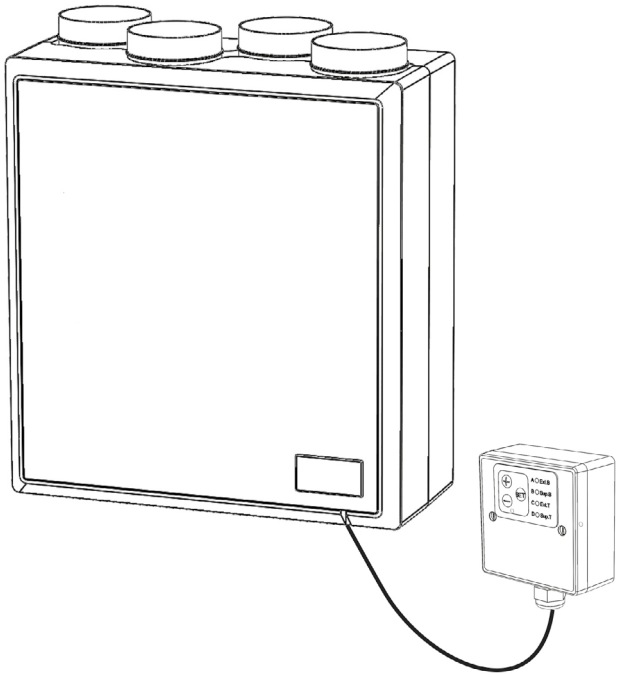

When fixing the remote control please ensure the ribbon cable is in place (contacts down, red side up)

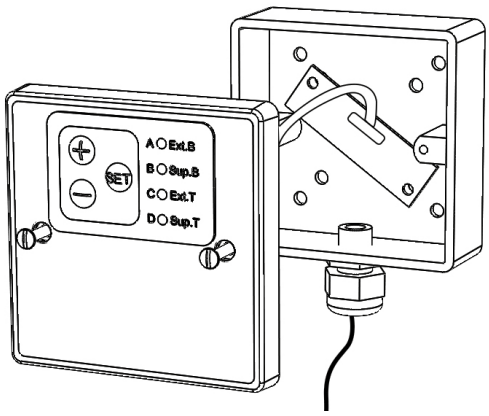

Installation Instructions

SECOND FIX - Drainage for floor mounted units

Floor mount - LH drain

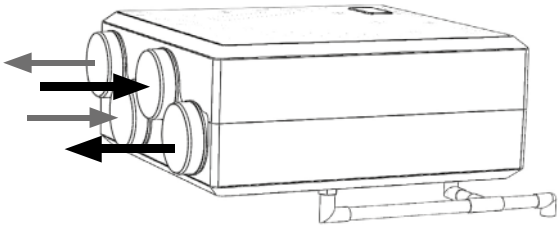

To atmosphere

Extract from dwelling

From atmosphere

Supply to dwelling

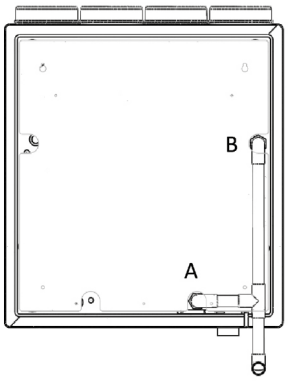

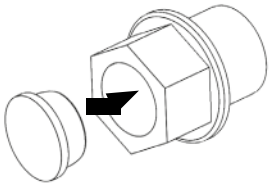

Place stopper provided into the fitted drain

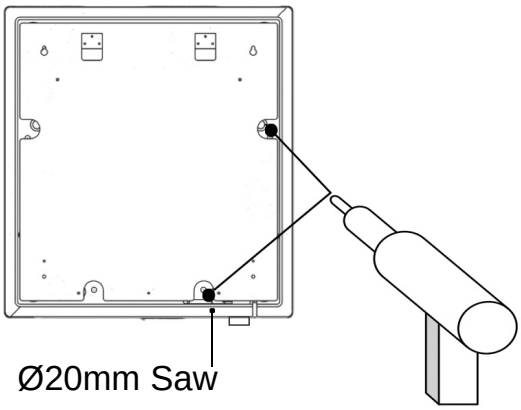

Ø20mm Saw

Floor mount - RH drain

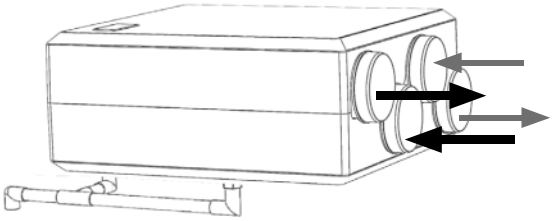

To atmosphere

Extract from dwelling

From atmosphere

Supply to dwelling

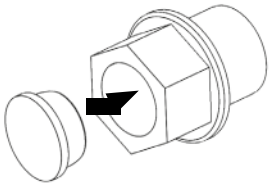

Place stopper provided into the fitted drain

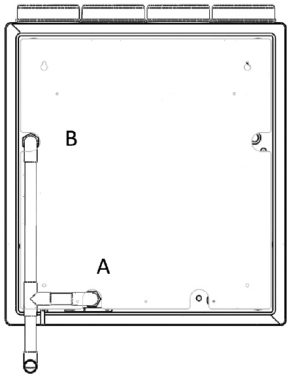

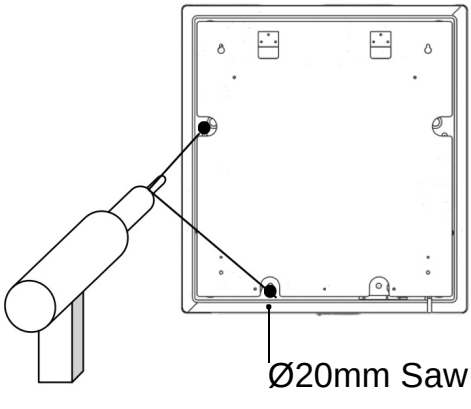

Ø20mm Saw

Drill into the case as shown, using the metal plate as a guide. Ensure that the foam core is fully removed.

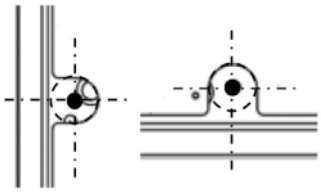

Commissioning

Setup guide for the Duplexvent

The commissioning panel is found on the the remote switch.

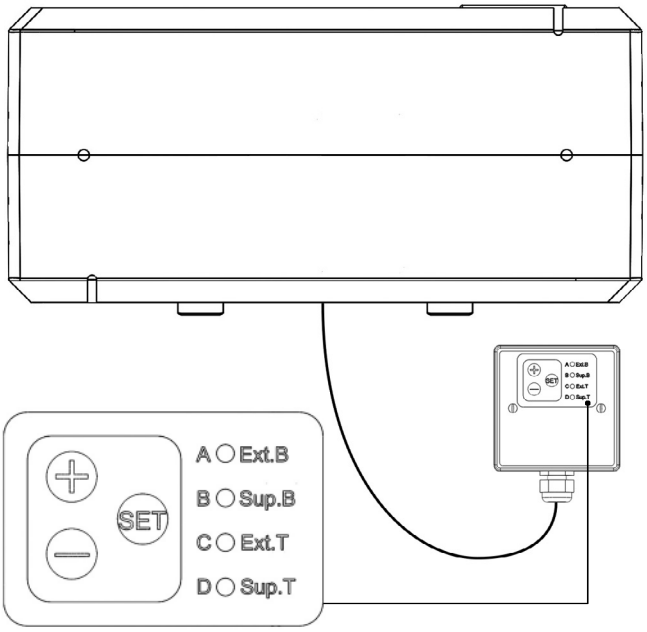

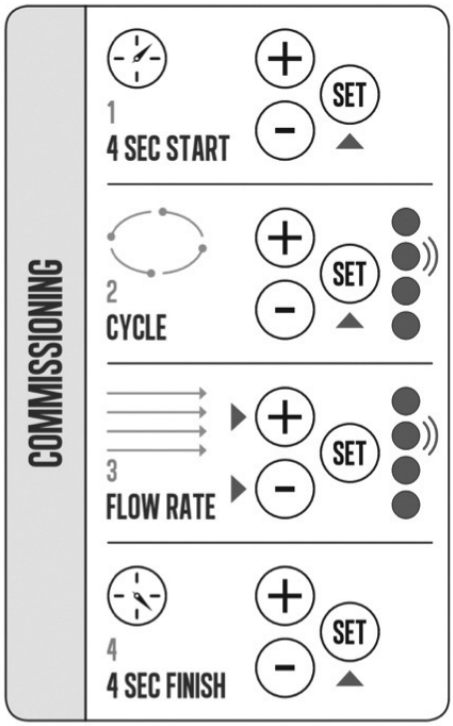

Commissioning mode is chosen by pressing the SET button for 4 seconds, all sensor inputs will be disabled in this mode so that they do not interfere with flow rates. All LEDs will light with the Extract Boost flashing (Ext B), this indicates that the flow rate may now be increased/decreased as required.

The next press of the SET button will move commissioning to the next setting, Sup.B and so on. When the unit has been fully commissioned, press the SET button for 4 seconds and this will put the unit back into status mode. If the unit is not put back into status mode after commissioning, it will automatically revert back to status mode after an hour.

Note: Settings will be retained if the power supply is interrupted.

LED Indications	
Constant LED	Flashing LED
(A) Frost protection ON (B) Boost state - Humidity ON (C) Boost state - switched input ON (D) Summer by-pass ON	(A) Service required (B) Service required
Supply and extract LED indications Commissioning mode only	

Checklist

- Installation instructions have been understood
- Ducting Ø125mm or larger has been used from the unit
- The unit is securely fixed into position with enough space left for servicing
- Condense drain is tight, drains to a suitable location and has been water tested

Maintenance

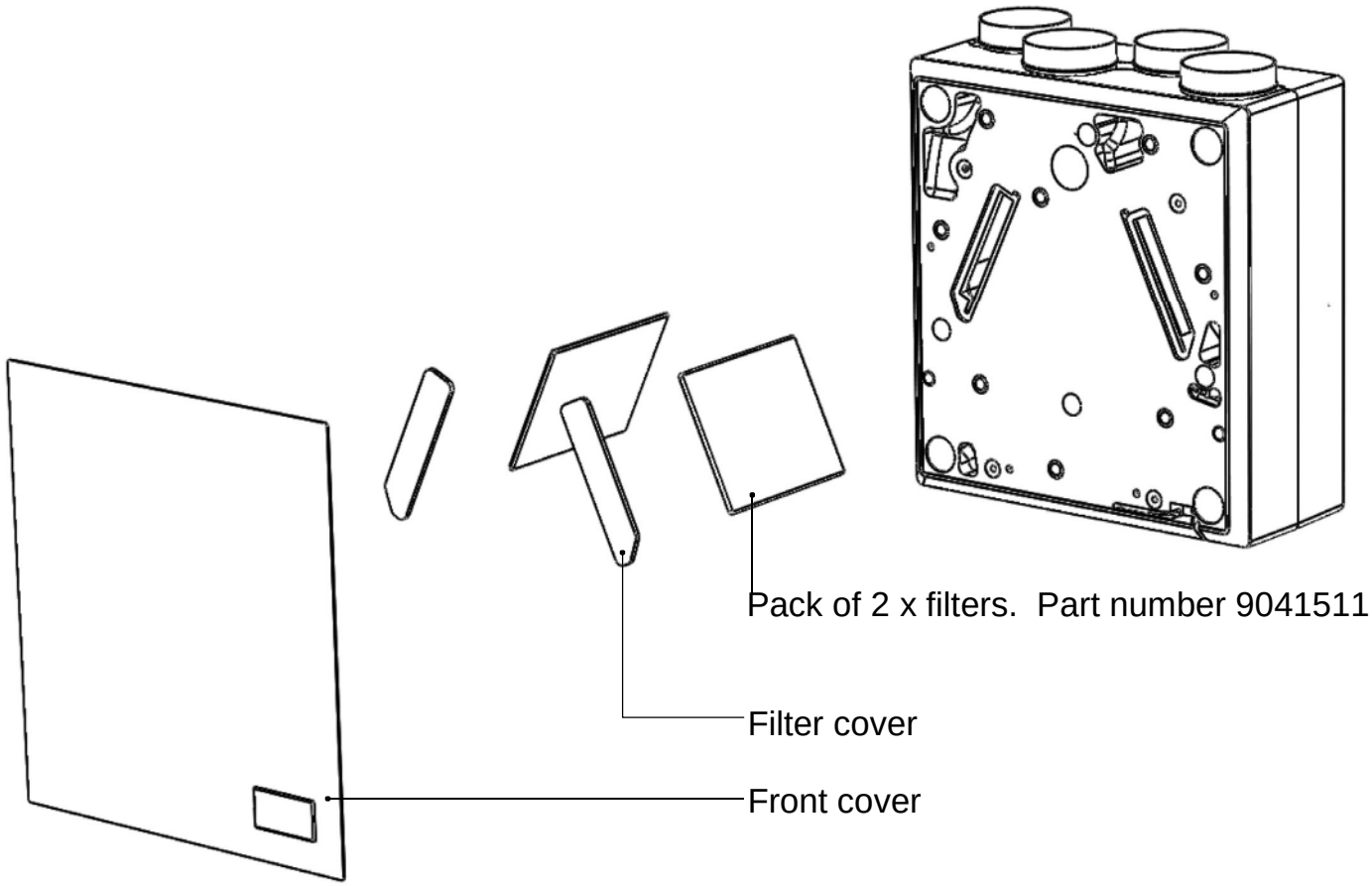

General advice:

Regular filter inspection is recommended. Minimum recommendation is to check filters every 6 months. Some installations will need more frequent filter inspection to ensure maximum efficiency of unit.

Filter Maintenance recommendation:

1. Switch off the power supply
2. Remove front panel
3. Remove filter covers
4. Remove the filters
5. Vacuum the outside of the filter or replace if required
6. After cleaning replace filters at same side
7. Replace filter covers and front panel

Major service:

This is to be carried out every five years (minimum) by an approved maintenance company.

Maintenance

Disassembly of unit for engineering access and maintenance

1. Remove the front cover...held on with velcro pads.

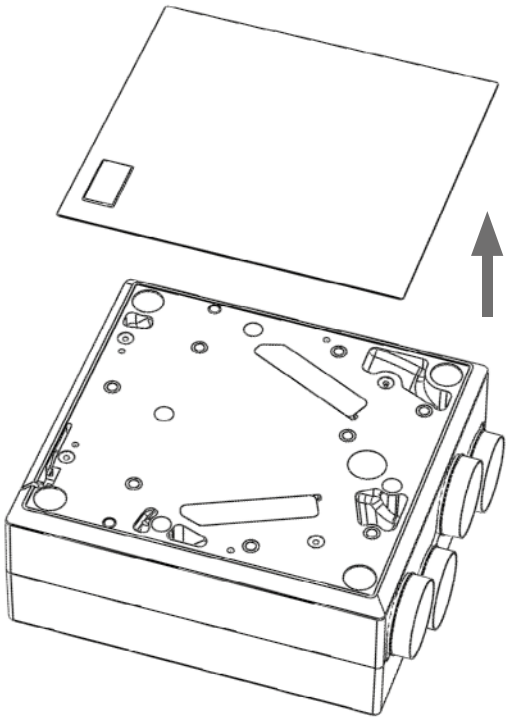

2. Remove retaining screws and washers x 4, store safely.

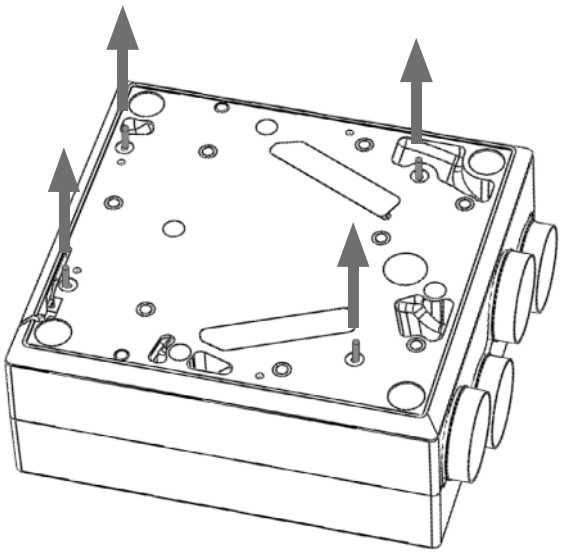

3. Carefully remove the top foam moulding by pulling it straight forward. Foam mouldings must remain parallel.

   Take care not to damage the sealing gaskets.

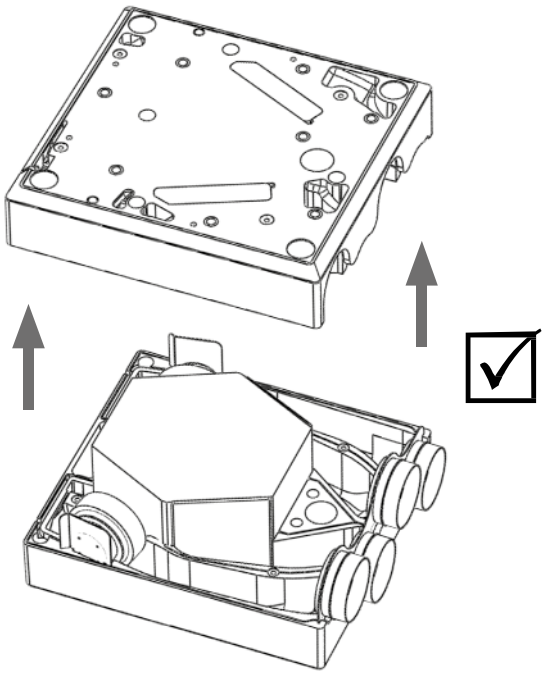

Do not pull from one edge as this may damage the internal fixing rods.

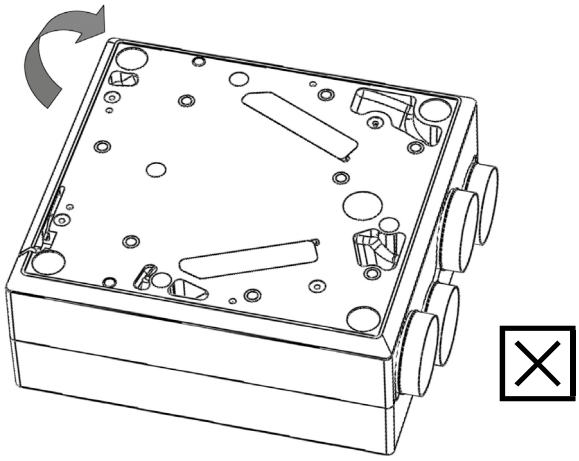

When reassembling the unit should be, after maintenance, ensure there are no trapped wires and that seals are intact.

SAP Appendix Q Testing Results

Central mechanical supply and exhaust ventilation system packages with heat recovery used in a single dwelling

Brand Name		Airflow
Model		Duplexvent DV72R and DV72L
Model Qualifier (if applicable)		
Current Manufacturer and Contact Details	**Name**	Airflow Developments Ltd
	Address	Lancaster Road Cressex Business Park High Wycombe HP12 3QP
	Telephone	01494 525252
	Website	www.airflow.com
Original Manufacturer (if different)		
First Year of Manufacture		2015
Last Year of Manufacture		
Testing Body		BRE
Date of test		22/03/2010
Serial Number of Product Tested		5780 EC
MVHR to outside grille duct types and size		150 & 125 mm diameter rigid plastic and 200 mm diameter rigid plastic
Duct types and sizes used for supply and exhaust		150 & 125 mm diameter rigid plastic and 200 mm diameter rigid plastic

Results of leakage tests

Table Q1

Internal	**Pass**
External	**Pass**

Results for SAP calculations (at minimum flow rate condition)

This product has only been tested with rigid ductwork and the data are not applicable for SAP calculations if installed with flexible ductwork.

Table Q2 – Systems with **rigid** ductwork only

Exhaust terminal configuration	Fan speed setting	Specific fan power (W/l/s)	Heat exchange efficiency (%)	Energy Saving Trust Best Practice Performance Compliant
Kitchen + 1 additional wet room	100% Variable	**0.73**	**91**	Yes
Kitchen + 2 additional wet rooms	100% Variable	**0.72**	**90**	Yes
Kitchen + 3 additional wet rooms	100% Variable	**0.79**	**89**	Yes
Kitchen + 4 additional wet rooms	100% Variable	**0.93**	**88**	Yes
Kitchen + 5 additional wet rooms	100% Variable	**1.06**	**87**	No

These figures are entered into either:

(a) In the case of SAP software amended to SAP 2005 version 9.81 allowing direct entry of MVHR data, the SAP software, or

(b) In the case of SAP software amended to SAP 2005 version 9.81 not allowing direct entry of MVHR data, the SAP Q MVHR Calculation Spreadsheet v9.81 and the results from the spreadsheet into the Special Features part of the SAP 9.81 software, or

(c) In the case of SAP software to SAP 2005 version 9.80, the SAP Q MVHR Calculation Spreadsheet v9.80 and the results from the spreadsheet into the Special Features part of the SAP 9.80 software. They must ***NOT*** be entered directly into SAP 2005 version 9.80 software

Table Q3 – Systems with **flexible** ductwork only

Exhaust terminal configuration	Fan speed setting	Specific fan power (W/l/s)	Heat exchange efficiency (%)	Energy Saving Trust Best Practice Performance Compliant
Kitchen + 1 additional wet room	N/A	**N/A**	**N/A**	N/A

These figures are entered into either:

(a) In the case of SAP software amended to SAP 2005 version 9.81 allowing direct entry of MVHR data, the SAP software, or

(b) In the case of SAP software amended to SAP 2005 version 9.81 not allowing direct entry of MVHR data, the SAP Q MVHR Calculation Spreadsheet v9.81 and the results from the spreadsheet into the Special Features part of the SAP 9.81 software, or

(c) In the case of SAP software to SAP 2005 version 9.80, the SAP Q MVHR Calculation Spreadsheet v9.80 and the results from the spreadsheet into the Special Features part of the SAP 9.80 software. They must ***NOT*** be entered directly into SAP 2005 version 9.80 software

Results for Approved Document F (at maximum flow rate condition)

Table Q4

Exhaust terminal configuration	Fan speed setting	Total exhaust flow rate (l/s)	Total supply flow rate (l/s)
Kitchen + 1 additional wet room	100% Variable	15.0	15.0
Kitchen + 2 additional wet rooms	100% Variable	21.0	21.0
Kitchen + 3 additional wet rooms	100% Variable	27.0	27.0
Kitchen + 4 additional wet rooms	100% Variable	33.0	33.0
Kitchen + 5 additional wet rooms	100% Variable	39.0	39.0

Comments

Only figures from Table Q2 or Table Q3, not both, should be used with the SAP Q Calculation Spreadsheet for this technology type.

Table Q4 results are only applicable for Approved Document F requirements.

Declaration of Conformity

We declare that the equipment detailed below conforms to the requirements of the EC council directives relating to electromagnetic compatibility and safety of electrical equipment.

Equipment type:	The Heat Recovery Appliance Model: **DV72**
Supplied by	Airflow Developments Limited Aidelle House, Lancaster Road Cressex Business Park High Wycombe Buckinghamshire HP12 3QP T: +44 (0) 1494 525252 Visit: airflow.com
Description of equipment:	Mechanical Heat Recovery Ventilation Unit
Relative EC Council Directives:	2004/108/EC (EMC) 2006/95/EC (LVD)
Applied Harmonised Standards:	EN 60335-1:2002/A2:2006 EN 60335-2-80:2003/A1:2004 BS EN 308:1997 EN13141-7:2004

Airflow Developments Limited warrants that heat recovery appliances are manufactured from high quality materials and that continuous quality control ensures that they comply with the above directive.

Warranty

This product has a warranty period of two years. The warranty can be upgraded to THREE years from the date of purchase against faulty material or workmanship by registering on our web site www.airflow.com

The warranty only covers the product and not the installation cost.

In case such a fault in the manufacture becomes apparent during the Warranty Period, Airflow may, at its absolute discretion, repair the product free of charge or refund the cost of the product AS LONG AS AND ONLY IF:

1. The product is returned within the Guarantee Period with evidence of purchase date
2. The product has not been misused or handled carelessly or used on an inappropriate voltage supply
3. Repairs have not been attempted other than by Airflow's service staff or
4. In Airflow's sole discretion, the product is found to be faulty. If it were not found to be faulty, the product would be available for collection from the relevant Airflow premises within one calendar month and if it was not collected, it would be subsequently delivered by Airflow and a delivery charge will be made.
5. Has been installed in accordance with the latest Building Regulations and IEE Wiring Regulations.

This warranty does not confer any rights other than those expressly set out above and does not cover any claims for consequential loss, damage or any costs incurred in the replacement of the faulty product.

This warranty is offered as an extra benefit and does not affect your statutory right as a consumer.

All information believed correct at time of going to press.

All goods are sold according to Airflow Developments Limited's Standard Condition of Sale which is available on request.

In the interest of continuous development Airflow Developments Limited continuously strive to improve their products and reserve the right to change specifications and prices without prior notice.

bpc Ventilation

8 Redlands Road
Larne
BT40 1AX
T: 02828 275150
W: www.bpcventilation.com
E: info@bpcventilation.com