Lo-Carbon Sentinel Kinetic Plus

Features & Benefits

- Recognised in SAP PCDB
- Ultra quiet
- Horizontal duct option for space-saving installations
- High airflow, ideal for student accommodation clusters
- Unique folding filter for removal when access is restricted
- Integrated digital controller for simple and accurate commissioning
- Lightweight for easy installation
- Plug and play controls; Humidistat, Ventwise, Wireless Remote
- BMS connectivity
- LS inputs (Light Switch)
- Volt-free inputs

BEAB Approved

Increased Performance

The Sentinel Kinetic Plus benefits from the latest high efficiency, backward curved impeller design, ensuring the lowest possible energy consumption, ultra quiet operation and an exceptional performance range covering small one bed apartments to the largest of houses.

Care Homes & Student Accommodation

The Sentinel Kinetic Plus is ideal for larger homes and multiple occupancy units such as care homes and student accommodation. Capable of 400m^3/hr at 150Pa, the unit can extract from up to ten bathrooms and a communal kitchen while still achieving almost 90% heat recovery. The fully automatic capability of the Kinetic range means that adequate ventilation is always achieved.

The Kinetic's BMS capability is also ideal for those commercial applications where landlords or property managers want to monitor and optimise building performance and maintenance. The Kinetic BMS can provide status information and its self diagnostics can report if any fault is found.

Spigot Options

Spigots may be re-positioned to give horizontal connection or a combination of vertical and horizontal connection.

Optional 180mm/200mm spigots can simplify connection in commercial installations where larger diameter duct work has been used.

Quick Change Filter

As many systems are placed within cupboards the unique filter design folds as you remove it to ensure easy access in restricted spaces.

Integral Humidity Sensor

The integral humidity sensor increases speed in proportion to relative humidity levels, saving energy and reducing noise. The sensor also reacts to small but rapid increases in humidity, even if the normal trigger threshold is not reached. This unique feature ensures adequate ventilation, even for the smallest wet room. The night time relative humidity setback feature suppresses nuisance tripping as humidity gradually increases with falling temperature.

Models

Model	Stock Ref
Kinetic Plus B Right	443028
Kinetic Plus B Left	443028L

Accessories

Model	Stock Ref
Wired Remote Controller	443283
Wireless Enable Kit	441865
Wireless Transmitter Controller	437827
Ventwise Controller	441780
LED Alarm with 15m cable	448356
Opto-coupler for volt-free bms connection	447340
Kinetic Spare Filters 2 pk.	443351
M5 Pollen Filter	444201
180mm/200mm Spigot Kit (One per pack)	446523

SAP PCDB Test Results

	Thermal Efficiency %	SFP (W/l/s)
K+1	91	0.51
K+2	91	0.40
K+3	90	0.41
K+4	90	0.45
K+5	90	0.53
K+6	90	0.60
K+7	90	0.70

SEC Class Rating

Model	SEC Class
Kinetic Plus B	A+

Dimensions (mm)

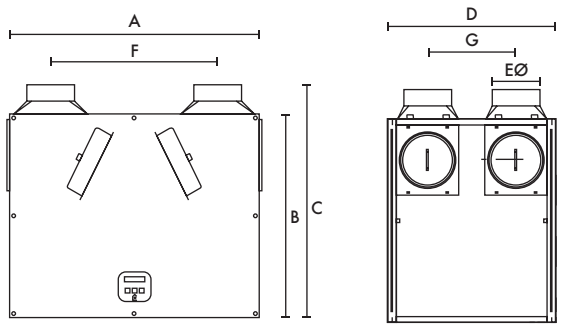

A	B	C	D	EØ	F	G
785	635	722	550	150	520	275

Weight: 24kg

Performance

Fan speeds are fully adjustable within the performance range.

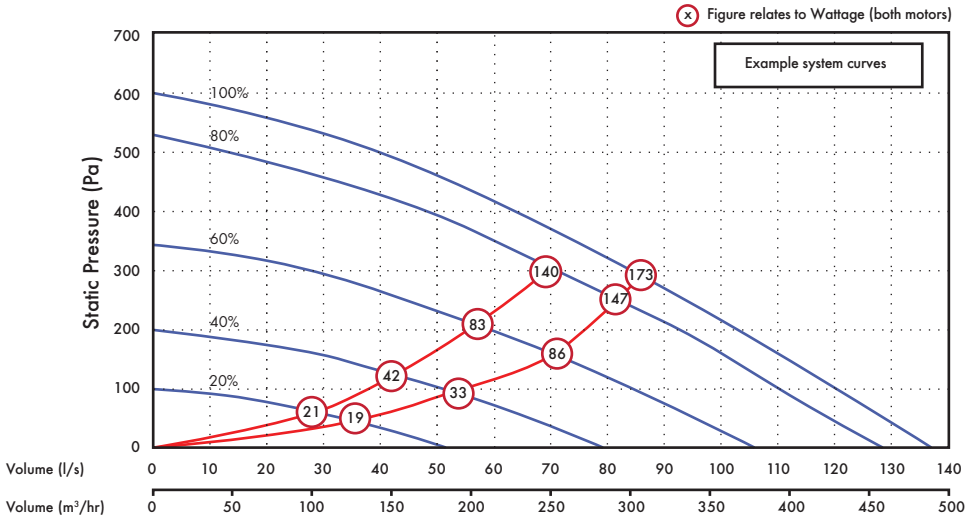

Sound Data

Flow l/s	Unit setting	Test mode	Octave band, Hz, dB SWL 63	125	250	500	1k	2k	4k	8k	SPL dB(A) at 3m
50	20%	Supply	46.5	54.3	46.4	44.8	36.2	28.5	24.5	31.2	28.5
		Extract	46	52.2	42.3	38.7	27.6	24.2	24	31.7	25
		Breakout	48.5	42.6	43.3	38.9	35.8	29.3	23.8	30.7	22.8
78	40%	Supply	50.3	59.1	54.5	56.5	47	39.9	26.3	31.7	38
		Extract	46.8	51.6	47.8	44.4	32.7	27.4	24.4	31.7	28
		Breakout	48.4	51.2	53.4	46	41	34.6	25	30.3	28.5
104	60%	Supply	52.4	57.2	60.4	60.9	55.8	50.3	33.1	33.9	43.6
		Extract	50	49.8	56.8	52.4	40.2	35.9	33.4	39.8	35.2
		Breakout	55	49.6	59.7	54.5	46.9	39.9	33.6	39.2	34.9
127	80%	Supply	54.9	60.7	67.4	66.6	61.8	56	39.6	37.7	49.5
		Extract	50.4	52	61.2	56.6	45.1	39.6	34.2	40.2	39.1
		Breakout	53.5	53.4	60.8	59.1	53	45.3	36	40.1	38.7
137	100%	Supply	54.7	61.7	70.5	69.9	62.7	57.5	42.1	38.3	52
		Extract	54.4	55.1	65.8	57.5	46.9	40.6	33.7	40	41.8
		Breakout	56.6	54.6	60.5	60.7	54.7	45.9	36.5	39.6	40

Tested according to BS848. Breakout quoted spherical. Supply and Extract quoted hemispherical.

Consultants Specification

Operation

The supply and extract ventilation unit shall be as Sentinel Kinetic Plus as manufactured by Vent-Axia and shall be sized as indicated on the drawings and shall be in accordance with the particular specification.

Supply air to the room shall be pre-heated by the extract air via the integrated composite plastic counterflow heat recovery cell. The Sentinel Kinetic Plus shall automatically vary the ventilation rate via EC/DC motors, as it receives signals from one of the optional interconnected sensors.

When a signal is received, the fans shall either vary their speed proportionally or on a trickle and boost principle.

The unit shall have the facility to commission the supply and extract fans individually via in-built minimum and maximum speed adjustment, or alternative wired remote control unit. The fans themselves shall have independent, infinitely variable speed control.

Unit Specification

The unit shall be manufactured with an ABS outer case construction, and incorporate a reversible core to allow for left or right hand mounting.

The unit shall have a high efficiency composite plastic counterflow heat exchanger, supply and extract filters, automatic summer bypass, integral minimum and maximum infinitely variable speed controls with facia mounted failure indication.

The unit shall have low energy, high efficiency EC/DC fan/motor assemblies with sealed for life bearings. The impellers shall be high efficiency backward curved centrifugal type.

The unit shall have a heat exchanger cell with a thermal efficiency of up to 92% when tested to EN 308. This shall be protected by G3 grade synthetic filters on supply and extract. Complete with a condensate drip tray and drain connection.

The unit shall be constructed with a removable Core allowing full maintenance access. The removable Core shall provide access to the following:

- ✓ Supply and extract filter
- ✓ Heat exchanger
- ✓ Access to the electrical connections

Access shall be provided for wiring termination and setup/commissioning. The backlit LCD user interface therein may be duplicated for remote mounting if required. Units shall be as manufactured by Vent-Axia Ltd.

Standard Controls

All Sentinel Kinetic units shall incorporate the following functions integrally mounted, pre-wired and factory fitted by the manufacturer:

- ✓ Integral infinitely variable fan speed control on supply and extract
- ✓ Integral min/max ventilation control/set point
- ✓ Integral BMS input/output interfaces – control and status indication
- ✓ Heating interlocks
- ✓ 0-10V proportional speed adjustment
- ✓ Volt free contacts
- ✓ 24V sensor supply
- ✓ Integral on/off or trickle boost function from remote switch, e.g. PIR occupancy detector
- ✓ Fully automatic summer bypass
- ✓ Switched Live input with adjustable 'delay-on' feature
- ✓ Fan failure or component failure indicated via individual fault code display
- ✓ Running time counter
- ✓ Control panel PIN number lock
- ✓ Automatic frost protection effective to -20°C
- ✓ The unit shall incorporate an integral humidity sensor with the following features:
  - Ambient Response; Raises the humidity trigger point as dwelling temperature reduces
  - Rapid Response: Monitors the rate of change in humidity and triggers increased airflow even if the humidity trigger threshold is not reached
  - Proportional Response; Incrementally increases the fan speed to reduce noise and reduce energy consumption
- ✓ The unit shall be controlled by the 'Sentinel' control devices (enablers and sensors) as detailed in the schedule or on the drawings.
- ✓ Tool free filter access

Mounting Option

Wall Surface

Airflow Direction

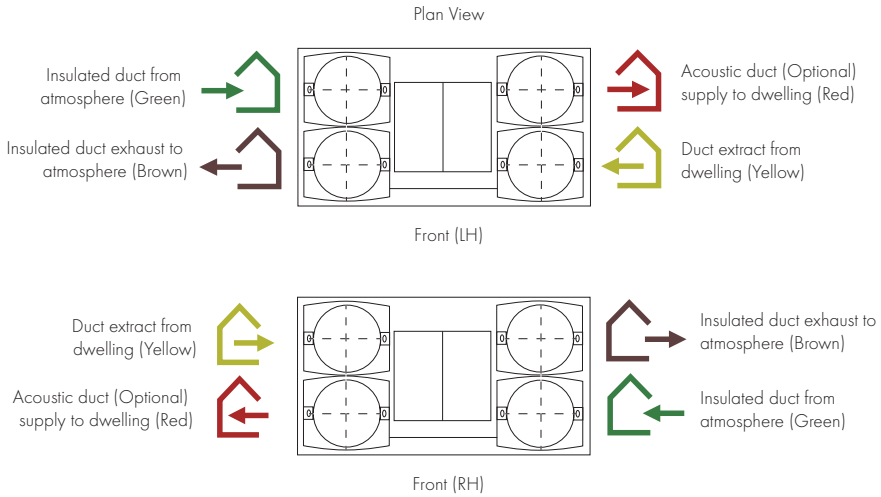

Electrical Connection

Please note: Electrical connection should be carried out by an appropriately qualified person and in accordance with current wiring regulations.

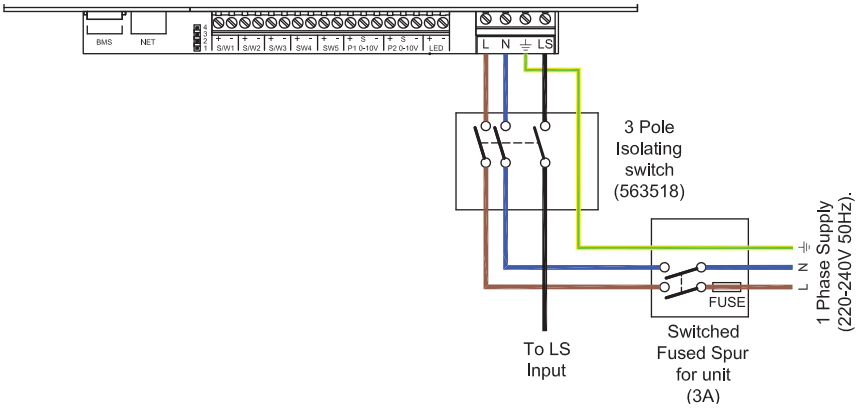

BPC Ventilation Ltd
8 Redlands Road
Larne
BT40 1AX

T: 028 2827 5150

E: info@bpcventilation.com

W: www.bpcventilation.com

View this product at: https://www.bpcventilation.com/vent-axia-kinetic-plus-b