English

Lossnay Energy Recovery Ventilator

MODELS:

LGH-15RVX-E, LGH-25RVX-E, LGH-35RVX-E
LGH-50RVX-E, LGH-65RVX-E, LGH-80RVX-E
LGH-100RVX-E, LGH-150RVX-E, LGH-200RVX-E

Installation Instructions (For use by dealer/contractor)

Models LGH-15 to 100RVX-E

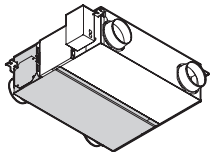

Models LGH-150 and 200RVX-E

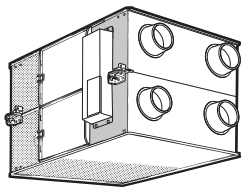

Contents

Safety precautions.....1
Outline drawings.....3
Standard installation examples.....4
Installation method 4
Function settings 13
Check points after installation work.....21
Trial operation.....21

This product needs to be installed properly in order to ensure maximum functionality as well as safety.
Please make sure to read this installation manual before starting the installation.

- Installation must be performed by a dealer or installation contractor. Please note that improper installation may cause malfunction or accident.

"Operating Instructions" and this manual must be handed over to the customer after completing the installation.

Safety precautions

The following signs indicate that death or serious injury may be caused by failure to heed the precautions described below.

⚠ WARNING

Do not disassemble	**Do not modify or disassemble.** (It could cause fire, electric shock or injury.)	The instructions given must be followed.	**Wiring work must be performed by qualified professionals, and be implemented safely and securely in accordance with the engineering standards and the extension wiring rules for electrical equipment.** (Poor connection or improper wiring work could cause electric shock or fire.)
Prohibition of use in bath or shower room	**The Lossnay unit and remote controller should not be installed where it is highly humid, like a bathroom, or other wet place.** (It could cause electric shock or power leakage.)		**Install a power supply isolator at the power supply side as per local electrical regulations. All supply circuits must be disconnected before obtaining access to the terminal devices. Use the specified cable size and connect the cables securely to prevent disconnection when they are pulled.** (If there is a defect in the connection, there is a possibility of fire.)
Connect the grounding wire.	**Connect the product properly to ground.** (Malfunctioning or power leaks can cause electrical shock.)		**Select an adequate place for the opening to introduce outdoor air, where it will not intake the exhaust fumes like combustion gas, or others, and there is no risk of blockage.** (Shortage of fresh air could put the room in a state of oxygen deficiency.)
The instructions given must be followed.	**Use the specified power supply and voltage.** (Use of incorrect power supply or voltage could cause fire or electric shock.) **Select a place with sufficient strength and install the main unit securely.** (It could cause injury if it falls.)		**A duct made of steel must be installed with care not to be connected electrically with metal, wire, stainless steel plate, or others.** (It could cause fire when power leakage occurs.)

⚠ CAUTION

Prohibited	**Do not place a burning appliance in a place where it is exposed directly to the air from the Lossnay unit.** (It could cause an accident as a result of incomplete combustion.) **Do not use at a place where it is exposed to high temperatures (40˚C or higher), naked flames, or in environment with combustible fumes.** (It could cause fire.) **Do not use in an environment such as a chemical factory, where hazardous gases such as acidic gases, alkaline gases, organic solvent fumes, paint fumes, or gases containing corrosive components are generated.** (It could malfunction.) **Do not install this product in a place where it is exposed to ultraviolet light.** (UV may damage covering insulation.)	The instructions given must be followed.	**The control box cover must be closed after the installation.** (Dust or humidity may cause power leakage or fire.) **When connecting external devices (electric heater, damper, lamp, monitoring unit, etc.) using output signals of the Lossnay unit, make sure to install safety equipment for the external devices.** (It could cause fire, damage, etc. without safety equipment.) **Select a duct heater in compliance with local and national laws, ordinances, and standards.** **Select a duct heater that has obtained the CE mark.** **Install the duct heater separated from the product by a distance of 2 m or more.** (Failure to do so may result in fire or equipment damage due to the transmission of residual heat from the heater.) **This appliance is not intended for use by persons (including children) with reduced physical sensory or mental capabilities, or lack of experience and knowledge, unless they have been given supervision or instruction concerning use of the appliance by a person responsible for their safety. Children should be supervised to ensure that they do not play with the appliance.** **(This appliance can be used by children aged from 8 years and above and persons with reduced physical, sensory or mental capabilities or lack of experience and knowledge if they have been given supervision or instruction concerning use of the appliance in a safe way and understand the hazards involved. Children shall not play with the appliance. Cleaning and user maintenance shall not be made by children without supervision.)**
The instructions given must be followed.	**Put on gloves during installation.** (It could cause injury.) **Make sure the power supply isolator is turned off on the power distribution panel when Lossnay is not used for a long period of time after the installation.** (It could cause electric shock, power leakage, or fire as a result of deteriorated insulation.) **Always use the specified suspension bolts, nuts and washers or correctly rated wire / chain hangers.** (Use of hardware with insufficient strength could result in the product dropping.) **The outside ducts must be tilted at a gradient (1/30 or more) down toward the outdoor louvres from Lossnay, and properly insulated.** (The entry of rain water may cause power leakage, fire, or damage to household property.)		

CAUTION

- **When using the product where it is exposed to high temperatures and humidity (40˚C or higher, RH 80% or higher), or where fog occurs frequently, moisture is likely to condense in the core, and may result in condensation build up in the unit. The product should not be used under such conditions.**
- **Outdoor air may enter the Lossnay owing to the pressure difference between indoor and outdoor or external winds even when the product is not operated. It is recommended to install an Electrically operated damper to block the outdoor air.**
- **In a cold weather area, an area with strong external winds or where fog occurs frequently, cold outdoor air, external winds or fog may be introduced into the product when its operation is stopped. It is recommended to install an Electrically operated damper.**
- **When using the product in an environment where there is a window, or opening near the outdoor louvre , where insects are likely to gather around the interior or exterior light , take note that small insects may intrude into the product.**
- **In a cold weather area, or others, dewing or freezing could occur on the main unit, where the duct is connected, or other sections, depending on the conditions of outdoor air and indoor temperature and moisture, even if they are within the range of operating conditions. Make sure to confirm the operating conditions and other precautions, and do not use the product if dewing or freezing is anticipated.**
  *Example of dewing condition - Outdoor air: -5˚C or lower, dew-point temperature at installation place: 10˚C or higher (When the indoor temperature is 22˚C or higher with the relative humidity higher than 50%, or other)

Outline drawings

LGH-15 to 100 RVX-E

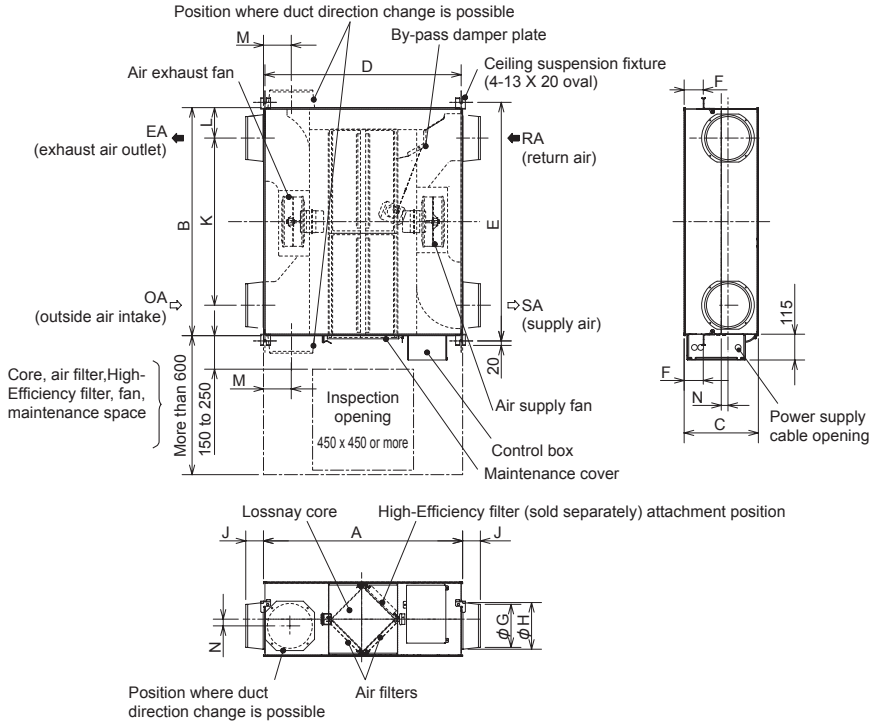

Accessory parts

- Mounting screws 4-8 for duct flanges x16
- Mounting screws M5-10 for ceiling suspension fixture.....x4
- Duct connecting flanges x4
- Screw cap.....x6
- Slim-Lossnay connection cable (gray: two wires) x1

Unit (mm)

Model	Dimensions			Ceiling suspension fixture pitch			Nominal diameter	Duct connecting flange			Duct pitch				Weight (kg)
	A	B	C	D	E	F		G	H	J	K	L	M	N	
LGH-15RVX-E	780	610	289	768	658	65	100	97.5	110	54	450	80	119	50	20
LGH-25RVX-E	780	735	289	768	782	65	150	142	160	64	530	102.5	102	30	23
LGH-35RVX-E	888	874	331	875	921	85	150	142	160	64	650	112	124	55	30
LGH-50RVX-E	888	1016	331	875	1063	85	200	192	208	79	745	135.5	124	30	33
LGH-65RVX-E	908	954	404	895	1001	70	200	192	208	79	692	131	124	–	38
LGH-80RVX-E	1144	1004	404	1131	1051	77	250	242	258	79	690	157	165	40	48
LGH-100RVX-E	1144	1231	404	1131	1278	77	250	242	258	79	917	157	165	40	54

LGH-150 and 200 RVX-E

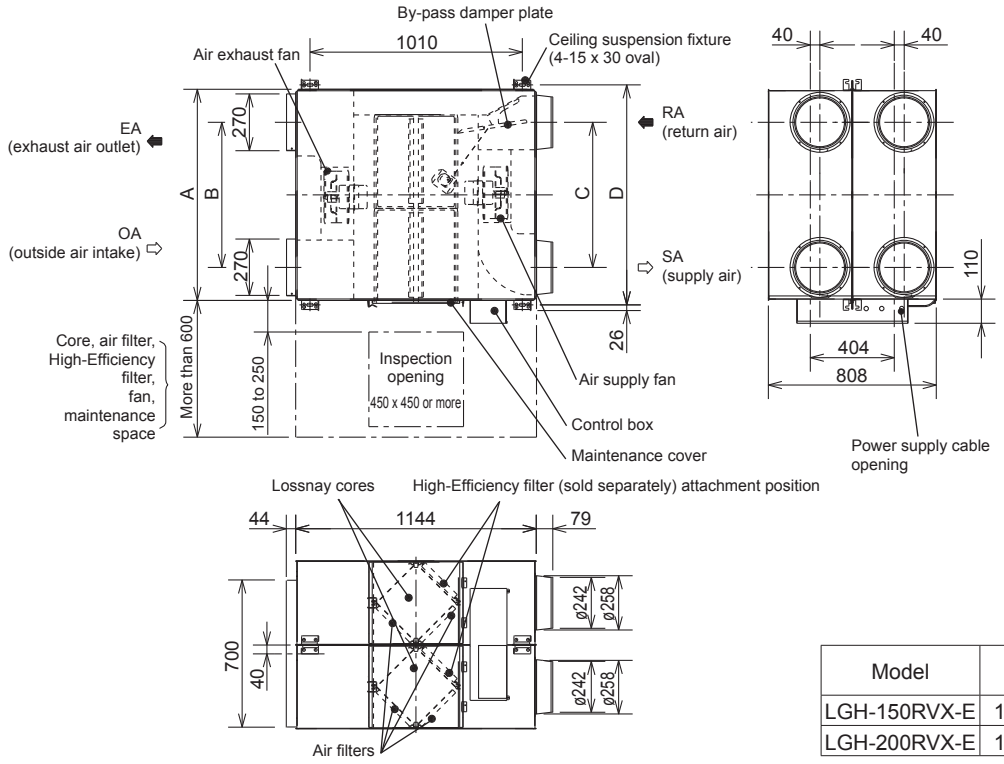

Accessory parts

- Mounting screws 4-8 for duct flanges x16
- Duct connecting flanges x4
- Screw cap.....x6
- Slim-Lossnay connection cable (gray: two wires) x1

Unit (mm)

Model	A	B	C	D	Weight (kg)
LGH-150RVX-E	1004	690	690	1045	98
LGH-200RVX-E	1231	917	917	1272	110

Standard installation examples

• Duct length

Model	Distance
LGH-15 to 65RVX-E	1 m or more
LGH-80 and 100RVX-E	2.5 m or more
LGH-150 and 200RVX-E	3 m or more

• The parts can also be installed upside down. Remove the maintenance cover, rotate the parts by 180°, and re-install.

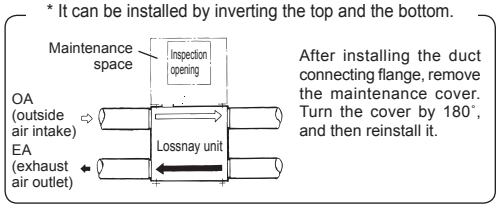

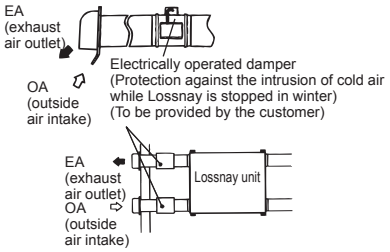

• In a region where there is risk of freezing in winter, it is recommended to install an Electrically operated damper, or the like, in order to prevent the intrusion of (cold) outdoor air while Lossnay is stopped.

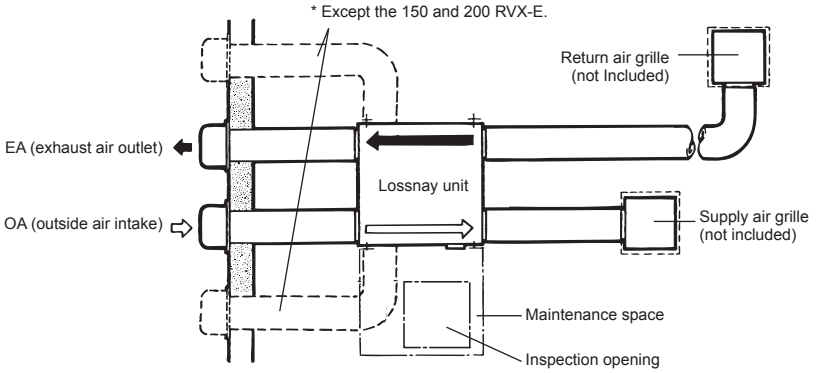

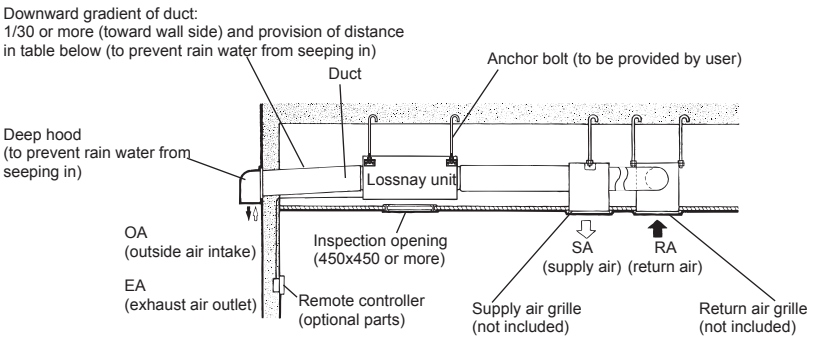

⚠CAUTION

• Do not install Lossnay unit vertically or on an incline.

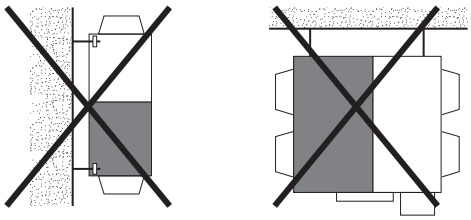

Installation method

Installing the Lossnay unit

1. Attaching the duct connecting flanges

Use the supplied screws (size:4-8) to secure the duct connecting flanges to the Lossnay unit.

Models LGH-15 to 100RVX-E

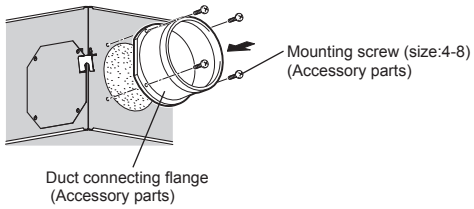

Models LGH-150 and 200RVX-E

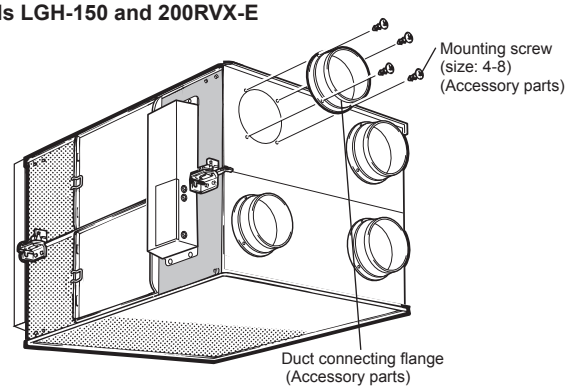

⚠ CAUTION

- **Before attaching the duct connecting flanges, check that no foreign matter (scraps of paper, vinyl, etc.) has found its way inside to Lossnay unit.**
- **Attach the duct connecting flanges with the packing at the SA and RA sides.**

2. Securing the ceiling suspension fixtures

Models LGH-15 to 100RVX-E

(1) Loosen the screws for the ceiling suspension fixtures.
(2) Rotate the ceiling suspension fixtures 90° centered around the loosened screws to make them horizontal.
(3) Firmly tighten and secure the ceiling suspension fixtures to the product with the loosened screws and the included mounting screws (M5-10).

* The ceiling suspension fixtures are folded and secured to the unit when shipped from the factory.

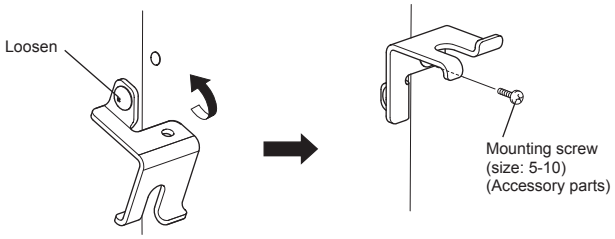

Installation method (continued)

3. Preparing the anchor bolts

Mount the washers (outer diameter of >21 mm for M10, >24 mm for M12) and nuts onto the pre-recessed anchor bolts (M10 or M12), as shown in the figure below.

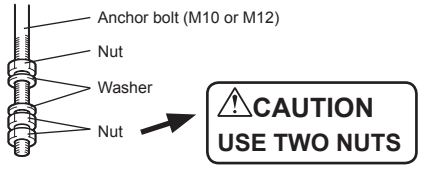

[When using (customer-prepared) vibration isolation rubber]
When using (customer-prepared) vibration isolation rubber, there is a possibility of this causing a decrease in strength, so we recommend the following type of construction.

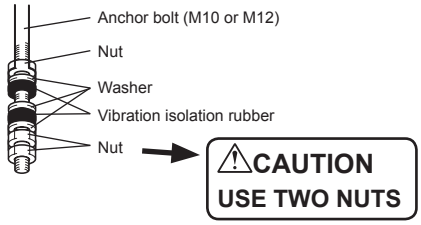

4. Mounting Lossnay unit

(1) Hang the ceiling suspension fixtures on the anchor bolts and adjust in such a way that Lossnay unit is level.
(2) Tighten up securely using double nuts.

Models LGH-15 to 100RVX-E

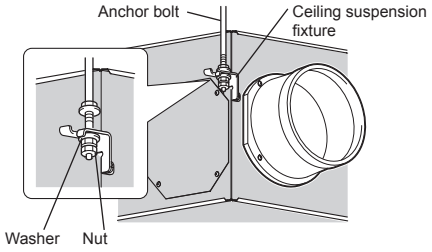

Models LGH-150 and 200RVX-E

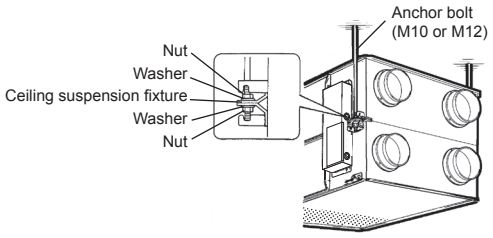

⚠CAUTION

- **When suspending Lossnay unit from the ceiling, do not handle it in such a way that force will be applied to the control box.**
- **Install the anchor bolts to ensure the product's weight or earthquake load. (Correctly rated wire/chain may also be used)**

5. Connecting the ducts

(1) Fasten the duct securely to the duct connecting flange, and wrap aluminium tape (field supply) around the joints so that there is no air leakage.
(2) Suspend the ducts from the ceiling so that their weight will not be applied to the Lossnay unit.
(3) The two outdoor ducts must be covered with heat-insulating material in order to prevent condensation from forming.

Models LGH-15 to 100RVX-E

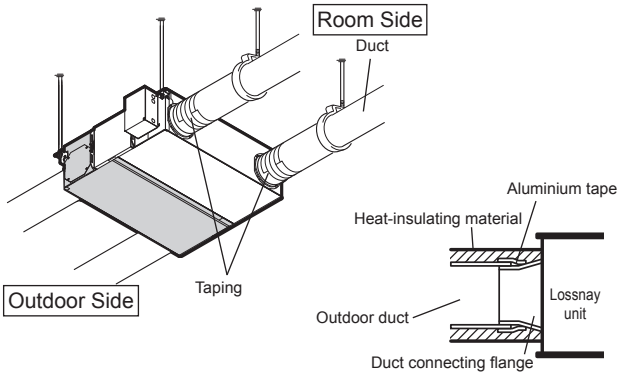

Models LGH-150 and 200RVX-E

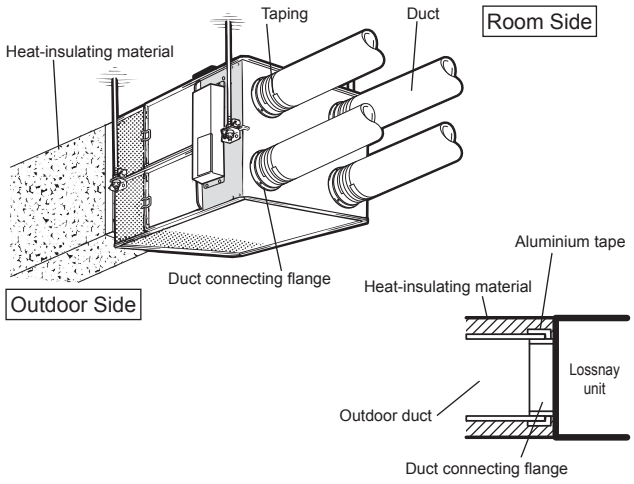

⚠ CAUTION

- **When on-site commissioning is planned, a straight duct length more than 10xD (D=duct diameter) from the source of turbulence like bends, contractions and dampers etc, to the measurement point is recommended for correct measurement. In the United Kingdam, on-site measurment should therefore be measured in accordance with BSRIA guideline (Commissioning Air System. Application procedures for buildings AG3/89.3(2001))**
- **Before attaching the ducts, check that no (debris or any other) foreign matter (scraps of paper, vinyl, etc.) has found its way inside the ducts.**
- **Do not touch the damper plate inside Lossnay unit when connecting the ducts.**
- **If it is expected that the ambient temperature around the place where the Lossnay unit is installed will be high during the summer air conditioning season, it is recommended that the indoor duct work be covered with insulation material.**

Do not carry out the following types of duct construction. (Doing so could cause a drop in the air volume and generate abnormal noises.)

- Extremely sharp bends
- Multiple bends
- Bends right next to the outlet
- Extreme reduction in the diameter of the connected ducts

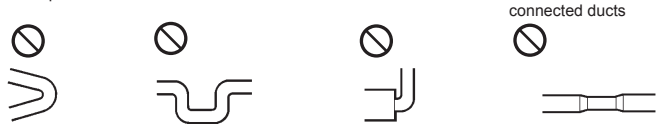

6. When changing the direction of the out door side duct (EA/OA) ···Except for LGH-150 and 200RVX-E

(1) Removal of flange cover

Unscrewing the flange cover mounting screws (4 pcs), remove the flange cover.

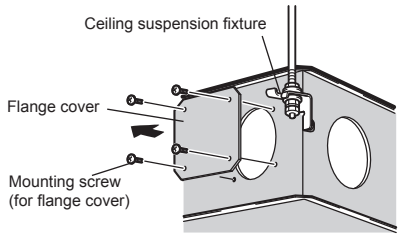

(2) Installation of duct connecting flange

1. Install the duct connecting flange using attached mounting screws.
2. Fix the removed flange cover with the removed mounting screws (4 pcs).

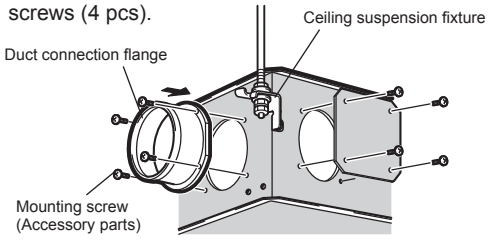

Electrical installation

With this product, the wiring installation method will vary according to the design of the system.
Perform electrical installation to meet local electrical regulations.

* Always use double insulated PVC cable for the transmission cables.
* Wiring work must be performed by qualified professionals.
* All supply circuits must be disconnected before obtaining access to the terminal devices.

Names of components in control box

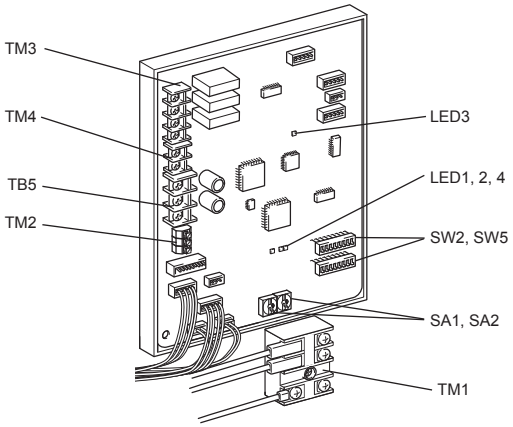

Installation method (continued)

Wire connection diagram ----- Model LGH-15 to 100 RVX-E

* TM1, TM2, TM3, TM4, TB5 shown in dotted lines are field work.
* Be sure to connect the ground wire.
* A power supply isolator must be installed.
* Always use an isolator for the main switch power connection.

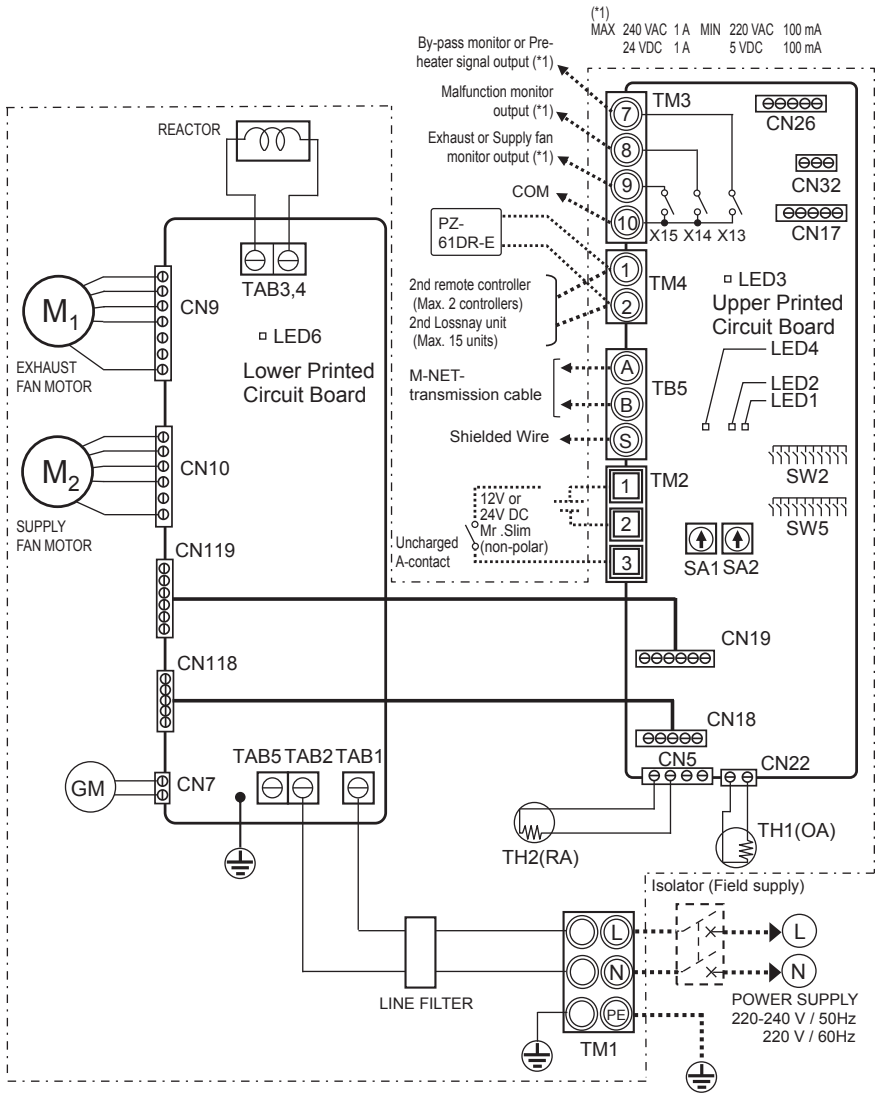

Definition of symbols		
M1: Motor for exhaust fan	X13: Relay contact	CN26: Connector (By-pass, 0 - 10 VDC Fan speed control)
M2: Motor for supply fan	X14: Relay contact	CN32: Connector (Remote control selection)
GM: Motor for By-pass damper	X15: Relay contact	SA1: Address setting rotary switch (10 digit)
TH1: Thermistor for outside air	CN5: Connector (Thermistor RA)	SA2: Address setting rotary switch (1 digit)
TH2: Thermistor for return air	CN7: Connector (Motor for By-pass damper)	LED1 to LED3: Inspection indicator lamp
SW2,5: Switch (Function selection)	CN9: Connector (Fan motor)	LED4, LED6: Power supply indicator lamp
TM1: Terminal block (Power supply)	CN10: Connector (Fan motor)	SYMBOL ◎ □: Terminal block
TM2: Terminal block (External control input)	CN17: Connector (Fan speed 1/2/3/4)	⊡ : Connector on PCB
TM3: Terminal block (Monitor output)	CN18: Connector	
TM4: Terminal block (Transmission cable)	CN118: Connector	
TB5: Terminal block (M-NET Transmission cable)	CN19: Connector	
TAB1, TAB2, (TAB5): Connector (Power supply)	CN119: Connector	
TAB3,TAB4: Connector (Reactor)	CN22: Connector (Thermistor OA)	

Installation method (continued)

Wire connection diagram ----- Models LGH-150 and 200 RVX-E

* TM1, TM2, TM3, TM4, TB5 shown in dotted lines are field work.
* Be sure to connect the ground wire.
* A power supply isolator must be installed.
* Always use an isolator for the main switch power connection.

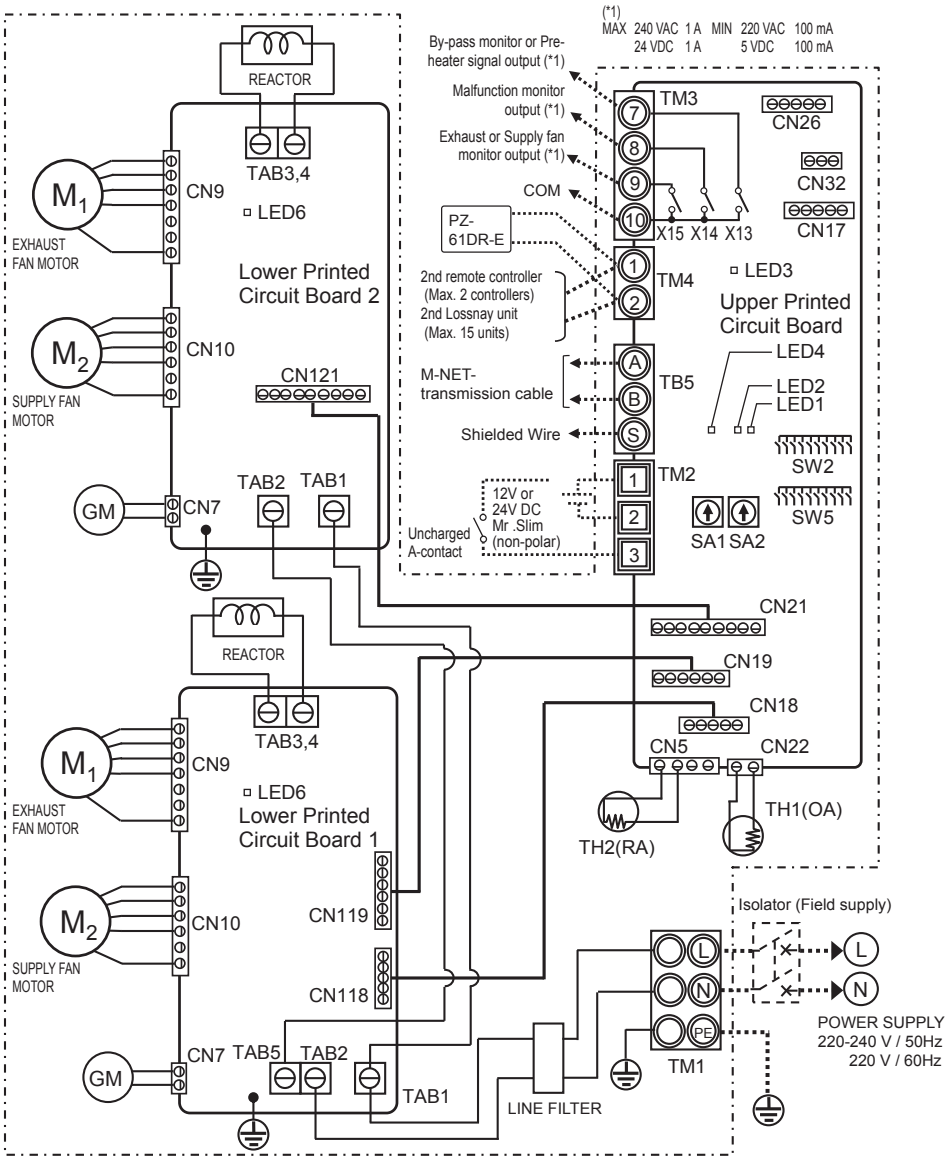

Definition of symbols		
M1: Motor for exhaust fan	X13: Relay contact	CN21: Connector
M2: Motor for supply fan	X14: Relay contact	CN121: Connector
GM: Motor for By-pass damper	X15: Relay contact	CN22: Connector (Thermistor OA)
TH1: Thermistor for outside air	CN5: Connector (Thermistor RA)	CN26: Connector (By-pass, 0 - 10 VDC Fan speed control)
TH2: Thermistor for return air	CN7: Connector (Motor for By-pass damper)	CN32: Connector (Remote control selection)
SW2, 5: Switch (Function selection)	CN9: Connector (Fan motor)	SA1: Address setting rotary switch (10 digit)
TM1: Terminal block (Power supply)	CN10: Connector (Fan motor)	SA2: Address setting rotary switch (1 digit)
TM2: Terminal block (External control input)	CN17: Connector (Fan speed 1/2/3/4)	LED1 to LED3: Inspection indicator lamp
TM3: Terminal block (Monitor output)	CN18: Connector	LED4, LED6: Power supply indicator lamp
TM4: Terminal block (Transmission cable)	CN118: Connector	SYMBOL ◎ □: Terminal block
TB5: Terminal block (M-NET Transmission cable)	CN19: Connector	⊡ : Connector on PCB
TAB1, TAB2, TAB5: Connector (Power supply)	CN119: Connector	
TAB3, TAB4: Connector (Reactor)		

Installation method (continued)

Connecting the power supply cable

1. Remove the black screws and the control box cover

LGH-15 to 100 RVX-E

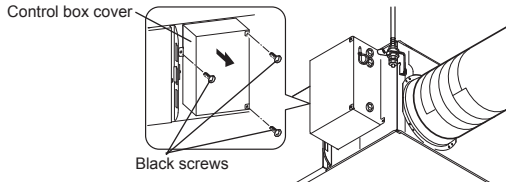

LGH-150 and 200 RVX-E

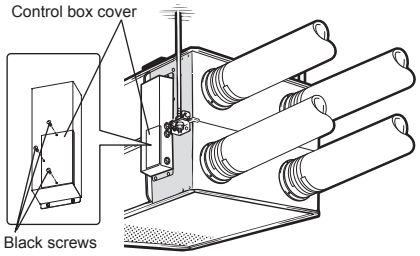

2. Attach the screw cap.

Models LGH-15 to 100RVX-E

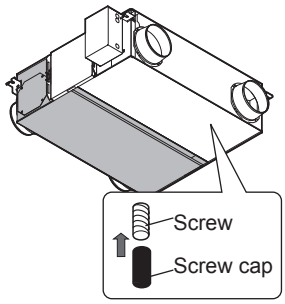

Models LGH-150 and 200RVX-E

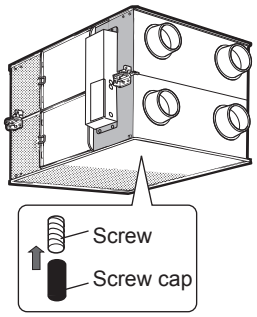

⚠ CAUTION

- **After installing the Lossnay unit, attach the supplied screw caps to the screws at the bottom of the unit.**

3. Connecting the power supply cable and transmission cable

Pass the Power supply cable through the bush* and connect to the TM1 terminal block using the round terminals. Connect the ground wire to the ground terminal and secure tightening the bush. (* Use an item that can firmly secure the cable such as a PG connector.)

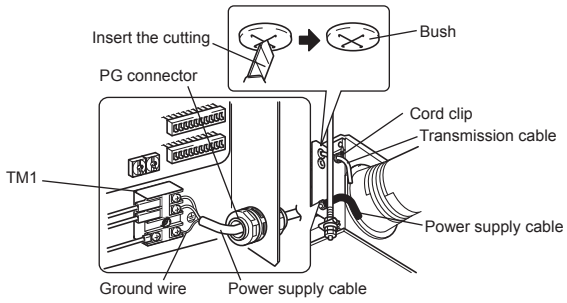

⚠ CAUTION

- **Always separate the power supply cable and transmission cable by 5 cm or more to prevent malfunctioning of the unit.**
- **If the length of the stripped Power supply cable is too long, the conductors may touch and short out.**
- **Power supply cable size : 1.5 mm² (ø9)or more.**

(1) Tighten the ground wire and transmission cables to the terminal block.
(2) Secure the transmission cables using the cord clips.

Upon completion of the wiring connections, replace the control box cover.

The following system configuration can be created. Connect the necessary parts.

1 When connecting with remote controller (PZ-61DR-E).
2 When interlocked with indoor unit of air conditioner or other external device including other manufactures.
3 When operating multiple Lossnay units.
4 By-pass monitor or Pre-heater signal output.
5 Malfunction monitor output.
6 Operation monitor output
7 When switching fan speed externally (when a sensor or other device is connected).
8 When switching By-pass externally.
9 To change fan speed by 0 - 10 VDC input
10 When using the remote/local switching and the ON/OFF input (level signal)
11 When connecting to the City Multi or Mitsubishi Electric Air-Conditioner Network System (MELANS).
12 To start/stop Lossnay stand-alone operation without using the remote control

⚠CAUTION

- **When connecting external devices (electric heater, damper, lamp, monitoring unit, etc.) using output signals of the Lossnay unit, make sure to install safety equipment for the external devices.**
  (It could cause fire, damage, etc. without safety equipment.)

1 When connecting with remote controller (PZ-61DR-E)

* When controlling Lossnay units with MELANS, connect wires according to 11 .

Securely connect the transmission cable from the remote controller to ① and ② of the input terminal block (TM4). (No polarity)
Wire type: two-core sheathed cable
Wire diameter: 0.3 mm²

- If there are two remote controllers, connect them in the same way.
- Keep the overall length of the transmission cable between Lossnay and the remote controller within 200 m.

Note

- **Do not tighten screws of terminal block with a torque larger than 0.5 Nm. It could damage the PCB.**
- **Take care not to connect the power supply cable or M-NET transmission cable.**
- **Number of transmission cables which can be connected to single input terminal is up to 4 wires.**
- **Single wires such as PVC wires cannot be connected.**

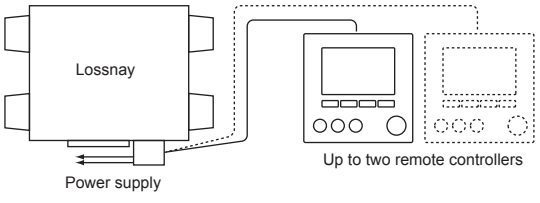

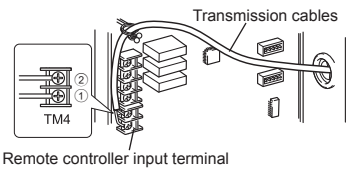

Installation method (continued)

2 When interlocked with indoor unit of air conditioner or other external device including other manufactures

⚠ CAUTION

- **The connection may vary according to the output signal type of the external unit.**
- **Don't tighten screws of terminal block with a torque larger than 0.5 Nm. It could damage the PCB.**

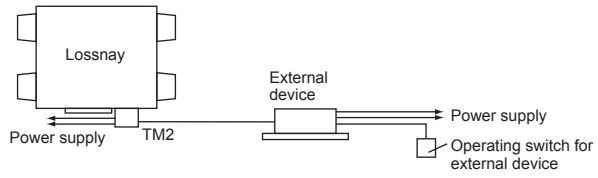

When using Mitsubishi Mr. Slim air conditioner with MA Remote controller

Confirm that the pulse input switch (SW2-2) is set to "OFF". (Factory setting is "OFF".) (Refer to function settings No. 28) Connect the interlocking cable connector side to CN2L on the circuit board for the Mr. Slim indoor unit, then connect the lead wire side to the ① and ② of the input terminal block (TM2) for the Lossnay external controller input. (No polarity)

- Always separate the power supply cable and the Slim-Lossnay connection cable by 5 cm or more to prevent the unit from malfunctioning.
- The Slim-Lossnay connection cable is 100 mm long. When wiring, extend it as far as necessary.

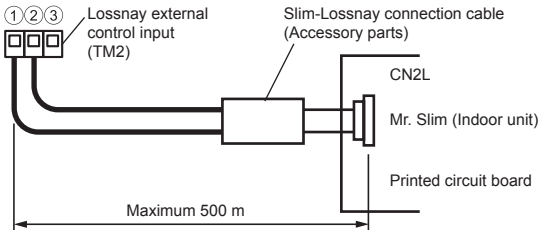

Note

- **The Lossnay remote controller (PZ-61DR-E) cannot be used with this system.**
- **Use MA remote controller of Mr. Slim for switching Lossnay ON/OFF or the fan speed.**
- **The ventilation mode is "automatic ventilation".**
- **Ensure that all connections are secure and that the appropriate insulation is provided.**
  Use extension cable sheathed PVC cable or cable 0.5 mm² to 1.5 mm².

When the external device has a charged operating signal of 12 VDC or 24 VDC

[SW2-2] setting vary depending on the types of output signal of external device.

- Move the pulse input switch [SW2-2] to the ON position. (Refer to function settings No. 28)
- When interlocking with a pulse output device, a pulse width is at least 200 m sec. to turn Lossnay ON, and 10 sec. interval is necessary to next output.
- The wiring should be the following picture.

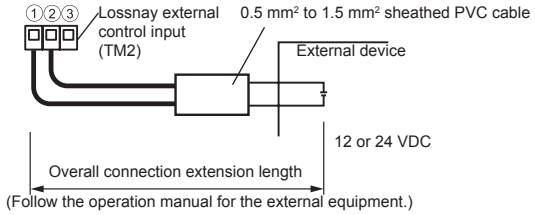

When the external device has an uncharged a-contact signal

- The wiring should be the following picture.

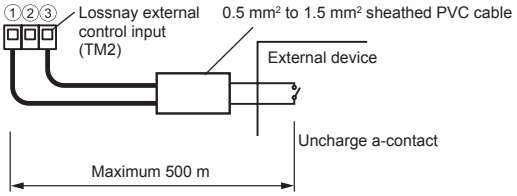

⚠ CAUTION

- **If an optocoupler or any other type of polar coupler is used at the uncharged a-contact, connect the positive side to ③ and the negative side to ①.**

3 When operating multiple Lossnay units

1) Connect from Lossnay Unit 1 to Lossnay Unit 2, and from Unit 2 to Unit 3 and so on up to a maximum of 15 units using a transmission cable.
   Wire type: two-core sheathed cable
   Wire diameter: 0.3 mm²
2) When it is interlocked with an external device, turn ON the setting switch (SW5-10) of main Lossnay where the external signal is input.

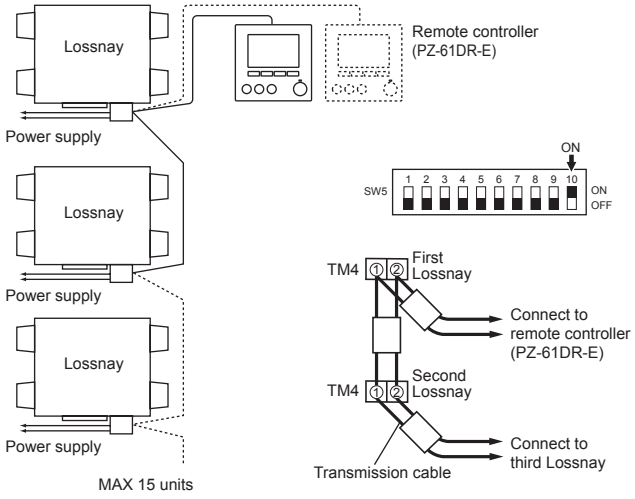

⚠ CAUTION

Don't tighten screws of terminal block with a torque larger than 0.5 Nm. It could damage the PCB.

Note

- **Up to four transmission cables can be connected to one input terminal.**
- **Single wires such as PVC wires cannot be connected.**
- **Only one unit can be set as main Lossnay. The operating signal and pulse signal of the external device can be connected to main Lossnay only.**
- **When the external signal is not input, main-unit setting is not required even for operation of multiple units.**
- **Connect the power supply cable to each Lossnay unit.**

Installation method (continued)

4 By-pass monitor or Pre-heater signal output.

By-pass monitor or Pre-heater signal can be selected at SW5-6.
(Refer to function settings No. 58)
Always check that it is the intended setting.

By-pass monitor SW5-6 OFF

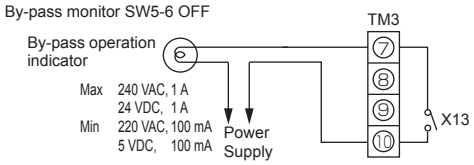

Pre-heater output SW5-6 ON

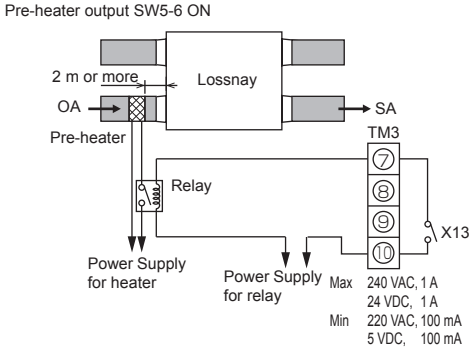

⚠ CAUTION

- **Select a duct heater in compliance with local and national laws, ordinances, and standards.**
  Select a duct heater that has obtained the CE mark.
- **Always select a heater that is equipped with a non-self-resetting safety device.**
  Do not directly supply power from the Lossnay unit to the duct heater.
  (Doing so could cause fire.)
- **Install a circuit breaker for the duct heater in compliance with all applicable laws, ordinances, and standards.**
- **Install the duct heater separated from the product by a distance of 2 m or more.**
  (Failure to do so may result in equipment damage due to the transmission of residual heat from the heater.)
- **When using a heater without a temperature control function, select a heater with a capacity that is matched to the air volume.**
- **Do not use the heater outside the set air volume.**
  (If the heater's capacity is too larger, this may result in the heater frequently turning ON/OFF.)
  (If the heater's capacity is too small, this may result an inability to heat.)
- **Ensure that the duct heater and Lossnay are wired and that the Lossnay function settings have been configured, and then always check operation by trial operation.**
- **For the duct heater output, see function setting SW5-6.**

5 Malfunction monitor output.

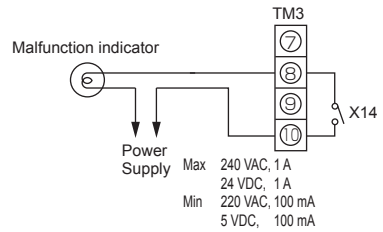

6 Operation monitor output

Operation monitor output can be selected to sympathize with exhaust fan or supply fan at SW 5-2.
SW5-2 OFF: Exhaust fan operation monitor output
SW5-2 ON: Supply fan operation monitor output
(Refer to function settings No. 57)
Always check that it is the intended setting.

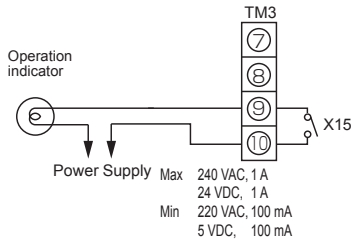

To use operation monitor output for a supply after-heater, turn SW2-8 ON, and use the supply fan operation monitor output with delayed operation. (Refer to function settings No. 57)
For the heater, observe the cautions listed in 4.

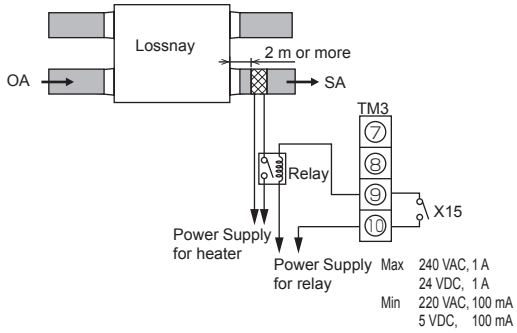

7 When switching fan speed externally (when a sensor or other equipment is connected)

Using a field supply sensor, etc., make connection by inserting the optional remote display adaptor (PAC-SA88HA-E) in the connector CN17 (Red) as shown by the figure.
Lossnay will operate the fan speed following the table below, regardless of the remote controller setting.

CN17 (Red)	Fan speed
1-2 (Brown-Red)	4
1-3 (Brown-Orange)	3
1-4 (Brown-Yellow)	2
1-5 (Brown-Green)	1

■ **Example "Fan speed 4"**

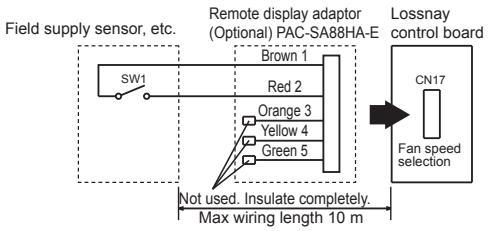

Use this in such a way that it ventilates at low fan speed normally, and when the external sensor detects contamination of indoor air, it changes to high fan speed operation.

Installation method (continued)

8 When switching By-pass externally.

Establish the wire connection by inserting the optional remote display adaptor (PAC-SA88HA-E) in the connector CN26 (White).

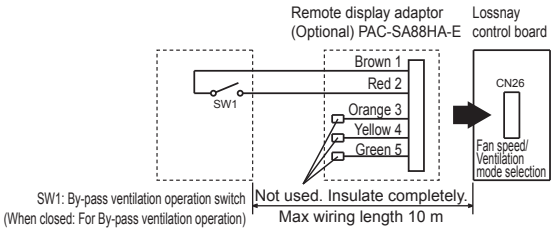

With SW1 is “ON”, the ventilation mode of Lossnay is changed to the By-pass ventilation regardless of the setting on the remote controller.

* When the outdoor air temperature drops lower than 8˚C, it changes to the heat exchanger ventilation. (Display of the remote controller does not change.)

9 To change fan speed by 0 - 10 VDC input

Establish the wire connection by inserting the optional remote display adaptor (PAC-SA88HA-E) in the connector CN26 (White).

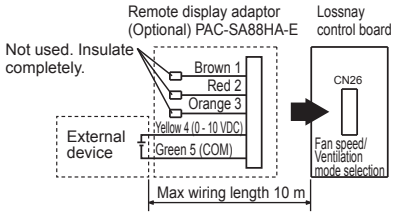

To change fan speed by 0 - 10 VDC input, the wiring should be the above picture. Refer to function settings No. 63 for more details.

⚠ CAUTION

- **Make sure of correct polarity.**

10 When using the remote/local switching and the ON/OFF input (level signal)

Insert the optional remote ON/OFF adaptor (PAC-SE55RA-E) in CN32 on the Lossnay control PCB.

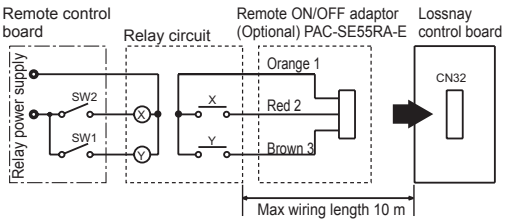

SW1: When this is ON, Lossnay cannot turn ON/OFF by the Remote Controller (PZ-61DR-E).

SW2: When SW1 is ON, Lossnay can be turned ON by setting SW2 at ON or turned OFF by setting SW2 at OFF.

SW1: Remote/local selector switch
SW2: ON/OFF switch
X, Y : Relay (Contactor rating DC 1 mA)

11 When connecting to the City Multi, Mitsubishi Electric Air-Conditioner Network System (MELANS)

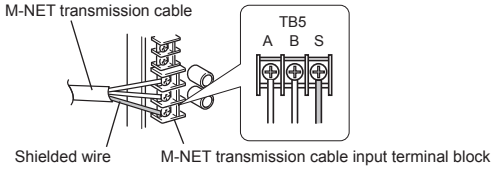

- One shielded wire is connected to terminal TB5 Ⓢ on the PCB.

Address setting is required. (Refer to function setting section.)

M-NET transmission cable: Connect any of the City Multi indoor unit, or Mitsubishi Electric Air-Conditioner Network System (MELANS) - to the Lossnay.

- Remote Controller
  PZ-61DR-E:
  Connect to TM4 ①, ② on the PCB. (See Section 1 “When connecting with Remote Controller (PZ-61DR-E)”.)
- Securely connect the M-NET transmission cables to TB5 ⒶⒷ. (No-Polar)
  Type: (Shielded wire, CVVS/CPEVS)
  Wire diameter: 1.25 mm² to 2.0 mm²

⚠ CAUTION

- **Don’t tighten screws on the terminal block with a torque larger than 0.5 Nm. It may damage the PCB.**
- **Always use shielded wires only for the M-NET transmission cables, and finish the shield properly.**

When interlocking with Mitsubishi M-NET air conditioner

- Incase of PZ-61DR-E

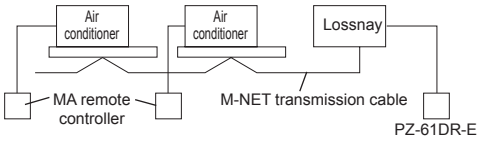

When connecting to PZ-61DR-E and MELANS

- Connect the power feeding unit.

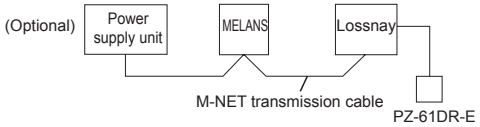

* Limit the total length of transmission cables no longer than 500 m. Limit the wiring length between Lossnay and the power supply unit (Optional) or the outdoor unit no longer than 200 m.

12 To start/stop Lossnay stand-alone operation without using the remote control

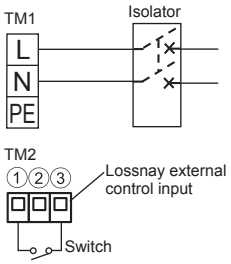

Start/stop the unit by a switch connected to TM2①③.
When turned the unit ON, it operates at fan speed 4 and automatic ventilation mode.
Do not start/stop the unit by turning the power supply to the unit ON/OFF.

Function settings

Address setting is required when connecting to City Multi and MELANS.

Setting the address

Use the following procedure when setting the address for dedicated Lossnay.
(The method in determining the addresses will depend on the existing system. Refer to the appropriate technical documents for details.)
(1) Remove the control box cover.
(2) Use a flat blade screwdriver to turn the address setting switch on the circuit board.
- SA1 indicates the 10 digit and SA2 indicates the 1 digit.
- The factory setting is “00”.

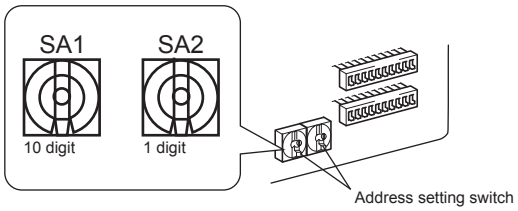

* When the address number has been changed, the data in the memory is automatically reset.

Changing the function selection switches (SW-2 and 5)

Set the selection switches (SW-2 and 5) to perform the appropriate function.
* All function except trial operation can be set also from the remote controller (PZ-61DR-E). If the function is switched later using the remote controller, it operates according to the setting on the remote controller.

(SW2)

	OFF ON	
1		Trial operation
2		No. 28 Pulse input setting
3		No. 63 External fan speed input setting (0 - 10 VDC)
4		No. 6 Indoor negative pressure setting
5		No. 7 Indoor positive pressure setting
6		No. 63 External fan speed input setting (0 - 10 VDC)
7		No. 51 Automatic ventilation mode setting
8		No. 57 Operation monitor output synchronized with exhaust fan or supply fan
9		No. 61 Fan speed for air volume “High” input
10		No. 62 Fan speed for air volume “Low” input

(SW5)

	OFF ON	
1		No. 9 Delay start setting for air conditioner starting
2		No. 57 Operation monitor output synchronized with exhaust fan or supply fan
3		No. 13 , No. 14 Exhaust fan setting
4		No. 5 Automatic recovery setting after power interruption
5		No. 1 Filter maintenance and fan power up setting against filter choking
6		No. 58 By-pass monitor output or Pre-heater output setting
7		No. 15 Interlock mode setting
8		No. 15 Interlock mode setting
9		No. 14 Exhaust fan setting at OA temperature lower than -15˚C
10		Input priority setting

Change the function settings from the remote controller PZ-61DR-E.

Please refer to the Instruction book of PZ-61DR-E for how to set the function settings.

Function settings (continued)

No	Function	Setting Data								Factory setting	DIP-SW No.
		0	1	2	3	4	5	6	7		
*1	Filter maintenance and fan power up setting against filter choking	Dip-SW priority	Indicator available Fan power up N/A	Indicator N/A Fan power up N/A	Indicator available Fan power up available	-	-	-	-	0	5-5
2	Lossnay core maintenance indicator setting	N/A	Available	-	-	-	-	-	-	0	N/A
5	Automatic recovery setting after power interruption	Dip-SW priority	Stop when the power is On	Start when the power is On	Return to the state before interruption	-	-	-	-	0	5-4
6	Indoor negative pressure setting	Dip-SW priority	N/A	Supply 1 down	Supply 2 down	-	-	-	-	0	2-4
7	Indoor positive pressure setting	Dip-SW priority	N/A	Exhaust 1 down	Exhaust 2 down	-	-	-	-	0	2-5
8	Max. fan speed setting during the first 30 minutes	N/A	Available	-	-	-	-	-	-	0	N/A
9	Delay start setting for air conditioner starting	Dip-SW priority	N/A	15 min	30 min	-	-	-	-	0	5-1
13	Exhaust fan setting during air conditioner defrosting	Dip-SW priority	Stop	No change	-	-	-	-	-	0	5-3
14	Exhaust fan setting at OA temperature lower than -15 ˚C	Dip-SW priority	Stop	Fan speed 1 or 2	No change	-	-	-	-	0	5-3 5-9
15	Interlock mode setting	Dip-SW priority	ON/OFF interlock	ON inter-lock	OFF inter-lock	External input given priority	-	-	-	0	5-7 5-8
28	Pulse input setting	Dip-SW priority	Non-pulse input	Pulse input	-	-	-	-	-	0	2-2
*30	Night-purge setting 1) Air volume	N/A	Fan speed 1	Fan speed 2	Fan speed 3	Fan speed 4	-	-	-	0	N/A
*31	Night-purge setting 2) Outdoor and indoor temperature gap	0 ˚C	1 ˚C	2 ˚C	3 ˚C	4 ˚C	5 ˚C	6 ˚C	7 ˚C	5	N/A
*32	Night-purge setting 3) The lowest outdoor temperature	Setting Data 0 to 15 --> The lowest outdoor temperature for Night-purge 15 ˚C to 30 ˚C								2	N/A
*34	Input priority setting	Main unit input prior-ity	Individual input prior-ity	-	-	-	-	-	-	0	N/A
36	Outdoor temperature display setting	N/A	Available	-	-	-	-	-	-	0	N/A
37	Indoor temperature display setting	N/A	Available	-	-	-	-	-	-	0	N/A
38	Calculated supply air temperature display setting	N/A	Available	-	-	-	-	-	-	0	N/A
39	Temperature exchange efficiency setting (10 digit)	Setting Data 0 to 9 --> 10 digit of temperature exchange efficiency 0 to 9								7	N/A
40	Temperature exchange efficiency setting (1 digit)	Setting Data 0 to 9 --> 1 digit of temperature exchange efficiency 0 to 9								0	N/A
*41	Outdoor temperature correction	Setting Data 0 to 14 --> Outdoor temperature correction -7 ˚C to 7 ˚C								7	N/A
*42	Indoor temperature correction	Setting Data 0 to 14 --> Room temperature correction -7 ˚C to 7 ˚C								7	N/A
*51	Automatic ventilation mode setting	Dip-SW priority	Pattern A	Pattern B	Free setting	-	-	-	-	0	2-7
*52	Automatic ventilation mode setting 1) Outdoor and indoor temperature gap	Setting Data 0 to 7 --> Temperature gap 0 ˚C to 7 ˚C								0	N/A
*53	Automatic ventilation mode setting 2) The lowest outdoor temperature setting	Setting Data 0 to 15 --> Lowest outdoor temperature 10 ˚C to 25 ˚C								6	N/A
*54	Automatic ventilation mode setting 3) The lowest indoor temperature setting	Setting Data 0 to 15 --> Lowest indoor temperature 15 ˚C to 30 ˚C								1	N/A
*55	Supply fan power up setting	N/A	1 level up	2 level up	3 level up	4 level up	-	-	-	0	N/A
*56	Exhaust fan power up setting	N/A	1 level up	2 level up	3 level up	4 level up	-	-	-	0	N/A
57	Operation monitor output synchronized with exhaust fan or supply fan	Dip-SW priority	EA fan monitor output	SA fan monitor output	SA fan monitor with delay operation	-	-	-	-	0	2-8 5-2
58	By-pass monitor output or Pre-heater output set-ting	Dip-SW priority	By-pass monitor output	Operation monitor output for Pre-heater	-	-	-	-	-	0	5-6
*59	Pre-heater setting 1) ON temperature	0 ˚C	-1 ˚C	-2 ˚C	-3 ˚C	-4 ˚C	-5 ˚C	-6 ˚C	-7 ˚C	0	N/A
*60	Pre-heater setting 2) OFF interval	1 hr	2 hr	3 hr	4 hr	5 hr	-	-	-	0	N/A
*61	Fan speed for air volume “High” input	Dip-SW priority	Fan speed 4	Fan speed 3	-	-	-	-	-	0	2-9
*62	Fan speed for air volume “Low” input	Dip-SW priority	Fan speed 2	Fan speed 1	-	-	-	-	-	0	2-10
*63	External fan speed input setting (0 - 10 VDC)	Dip-SW priority	N/A	Pattern X	Pattern Y	Pattern Z	-	-	-	0	2-3 2-6
100	Initialization	-	Initialize	-	-	-	-	-	-	0	N/A

This table shows the summary of function settings. Please refer to the following pages for more details.

The functions indicated with * are newly added or modified from Lossnay LGH-RX$_5$-E series.

The functions indicated with “N/A” in the “DIP-SW No.” column are available only when using with remote controller PZ-61DR-E.

Function settings (continued)

No. 1 Filter maintenance and fan power up setting against filter choking

Set the schedule for filter cleaning based on the estimated concentration of dust in the air.
When fan power up is available, exhaust and supply fans power up at 1,000 hrs and 2,000 hrs gradually .
If function No. 55 or No. 56 is already worked, fan power up function may not available.
Estimated hour differs by actual operated fan speed.

DIP-SW		Setting check	PZ-61DR-E		Setting check	Filter maintenance indicator	Fan power UP
SW No.	Setting		Function No.	Setting Data			
SW5-5	-	-	1	0 (Factory setting)		DIP-SW priority	
	-	-		1		Indicate at estimated 3,000 hrs	N/A
	OFF (Factory setting)			2		N/A	N/A
	ON			3		Indicate at estimated 3,000 hrs	Available

⚠CAUTION

- **When the setting for the cumulative operation time of the Lossnay is exceeded, the filter cleaning icon will appear on the indoor unit remote controller or the Lossnay remote controller. After cleaning the filter, the filter cleaning icon can be reset. Refer to the Instruction book for the remote controller.**

No. 2 Lossnay core maintenance indicator setting

Set to enable Lossnay core maintenance display. Estimated hour differs by actual operated fan speed.
This function is N/A from Lossnay unit DIP-SW.

DIP-SW		Setting check	PZ-61DR-E		Setting check	Lossnay core maintenance indicator
SW No.	Setting		Function No.	Setting Data		
N/A	-	-	2	0 (Factory setting)		N/A
	-	-		1		Indicate at estimated 6,000 hrs

No.5 Automatic recovery setting after power interruption

Sets for automatic recovery following power interruption.

DIP-SW		Setting check	PZ-61DR-E		Setting check	Automatic recovery
SW No.	Setting		Function No.	Setting Data		
SW5-4	-	-	5	0 (Factory setting)		DIP-SW priority
	OFF (Factory setting)			1		Stop when the power is on
	-	-		2		Start when the power is on
	ON			3		Lossnay returns to the state before interruption

No. 6 Indoor negative pressure setting

Exhaust fan speed becomes bigger than supply fan speed.
Remote controller indicates fan speed of exhaust fan.

Fan speed Display	Exhaust fan	Supply fan	
		1 down	2 down
4	4	3	2
3	3	2	1
2	2	1	1
1	1	1	1

DIP-SW		Setting check	PZ-61DR-E		Setting check	Down level of supply fan speed
SW No.	Setting		Function No.	Setting Data		
SW2-4	-	-	6	0 (Factory setting)		DIP-SW priority
	OFF (Factory setting)			1		N/A
	ON			2		Supply fan speed is 1 down to exhaust fan speed
	-	-		3		Supply fan speed is 2 down to exhaust fan speed

No.7 Indoor positive pressure setting

Supply fan speed becomes bigger than exhaust fan speed.
Remote controller indicates fan speed of supply fan.

Fan speed Display	Supply fan	Exhaust fan	
		1 down	2 down
4	4	3	2
3	3	2	1
2	2	1	1
1	1	1	1

DIP-SW		Setting check	PZ-61DR-E		Setting check	Down level of exhaust fan speed
SW No.	Setting		Function No.	Setting Data		
SW2-5	-	-	7	0 (Factory setting)		DIP-SW priority
	OFF (Factory setting)			1		N/A
	ON			2		Exhaust fan speed is 1 down to supply fan speed
	-	-		3		Exhaust fan speed is 2 down to supply fan speed

No.8 Max. fan speed setting during the first 30 minutes

This sets the fan to run forcibly for 30 minutes when operation starts to ventilate the indoor area. After 30 minutes, fan speed can be changed.
Use this setting if the indoor air is contaminated at night when the system is shut down and you desire to ventilate the indoor area quickly when operation is started in the morning.
This function is N/A from Lossnay unit DIP-SW.
During this function is working, is displayed at PZ-61DR-E and selected fan speed is displayed.

DIP-SW		Setting check	PZ-61DR-E		Setting check	Max. fan speed setting during the first 30 minutes
SW No.	Setting		Function No.	Setting Data		
N/A	-	-	8	0 (Factory setting)		N/A
	-	-		1		Available

No.9 Delay start setting for air conditioner starting

Delays Lossnay operation for 30 minutes when City Multi or Mr. Slim starts operating or when a external device starts operating.
This function is available only when Lossnay is interlocked with air conditioners. This function is N/A during Night-purge.

DIP-SW		Setting check	PZ-61DR-E		Setting check	Lossnay delay start
SW No.	Setting		Function No.	Setting Data		
SW5-1	-	-	9	0 (Factory setting)		DIP-SW priority
	OFF (Factory setting)			1		N/A
	-	-		2		15 min
	ON			3		30 min

No.13 Exhaust fan setting during air conditioner defrosting

This function can be used under the condition Lossnay supply duct is connected to Mr. Slim or City Multi indoor unit.
Sets the operation of the exhaust fan during defrosting of the air conditioner (when supply fan stop).
To enable this function, it is necessary to set the DIP-SW of the indoor unit also. Please refer to its manual.

DIP-SW		Setting check	PZ-61DR-E		Setting check	Exhaust fan operation during air conditioner defrosting
SW No.	Setting		Function No.	Setting Data		
SW5-3	-	-	13	0 (Factory setting)		DIP-SW priority
	OFF (Factory setting)			1		Stop
	ON			2		No change

Function settings (continued)

No.14 Exhaust fan setting at OA temperature lower than -15 ˚C

Sets the operation of the exhaust fan when the outdoor air is lower than -15 ˚C (when supply fan stop).

DIP-SW		Setting check	PZ-61DR-E		Setting check	Exhaust fan operation at outdoor temp. -15 ˚C or less
SW No.	Setting		Function No.	Setting Data		
SW5-3 SW5-9	-	-	14	0 (Factory setting)		DIP-SW priority
	5-3 OFF 5-9 ON			1		Stop
	5-3 ON 5-9 OFF			2		Forced to fan speed 2 or less*
	5-3 OFF 5-9 OFF (Factory setting)			3		No change
	5-3 ON 5-9 ON					

* In case Lossnay is operating fan speed 1, exhaust fan keeps fan speed 1. Function No. 13 and No. 14 are included in DIP-SW 5-3, then it is impossible to set independently without PZ-61DR-E.

No.15 Interlock mode setting

These settings indicate how Lossnay should operate when external devices are started or stopped.

DIP-SW		Setting check	PZ-61DR-E		Setting check	Interlock setting
SW No.	Setting		Function No.	Setting Data		
SW5-7 SW5-8	-	-	15	0 (Factory setting)		DIP-SW priority
	5-7 OFF 5-8 OFF (Factory setting)			1		The Lossnay will start and stop according to the operation of the external devices. Subsequent operation will be possible using the remote controller for the Lossnay or MELANS.
	5-7 ON 5-8 OFF			2		The Lossnay will start whenever external devices are operated. Lossnay stop operation will be possible using its remote controller or MELANS.
	5-7 OFF 5-8 ON			3		The Lossnay will stop whenever external devices are stopped. Lossnay start operation will be possible using its remote controller or MELANS.
	5-7 ON 5-8 ON			4		The Lossnay will start and stop according to the operation of the external devices. Control via the Lossnay remote controller or MELANS will only be possible when external devices are stopped.

No.28 Pulse input setting

Set external input signal type from external device for TM2.

DIP-SW		Setting check	PZ-61DR-E		Setting check	Pulse input setting
SW No.	Setting		Function No.	Setting Data		
SW2-2	-	-	28	0 (Factory setting)		DIP-SW priority
	OFF (Factory setting)			1		NOT pulse input
	ON			2		Pulse input

No.30 Night-purge setting 1) Air volume

Set fan speed during Night-purge. To use Night-purge function, it is necessary to set No. 30 , No. 31 , No. 32 correctly.
This function is N/A from Lossnay unit DIP-SW.

DIP-SW		Setting check	PZ-61DR-E		Setting check	Night-purge setting 1) Air volume
SW No.	Setting		Function No.	Setting Data		
N/A	-	-	30	0 (Factory setting)		N/A (Night-purge function is not available)
	-	-		1		Fan speed 1
	-	-		2		Fan speed 2
	-	-		3		Fan speed 3
	-	-		4		Fan speed 4

No.31 Night-purge setting 2) Outdoor and indoor temperature gap

Set one of conditions for Night-purge start, temperature gap between indoor and outdoor.
When the actual gap between indoor and outdoor becomes bigger than the setting, Night-purge starts.
This function is N/A from Lossnay unit DIP-SW.

DIP-SW		Setting check	PZ-61DR-E		Setting check	Indoor temperature - outdoor temperature
SW No.	Setting		Function No.	Setting Data		
N/A	-	-	31	0		0 ˚C or more
	-	-		1		1 ˚C or more
	-	-		2		2 ˚C or more
	-	-		3		3 ˚C or more
	-	-		4		4 ˚C or more
	-	-		5 (Factory setting)		5 ˚C or more
	-	-		6		6 ˚C or more
	-	-		7		7 ˚C or more

No.32 Night-purge setting 3) The lowest outdoor temperature

Set one of conditions for Night-purge start, maximum outdoor temperature within 24 hours.
When this setting temperature is low, it is likely to start Night-purge.
This function is N/A from Lossnay unit DIP-SW.

DIP-SW		Setting check	PZ-61DR-E		Setting check	The maximum outdoor temp. within 24 hrs
SW No.	Setting		Function No.	Setting Data		
N/A	-	-	32	0		15 ˚C or more
	-	-		1		16 ˚C or more
	-	-		2 (Factory setting)		17 ˚C or more
	-	-		3		18 ˚C or more
	-	-		4		19 ˚C or more
	-	-		5		20 ˚C or more
	-	-		6		21 ˚C or more
	-	-		7		22 ˚C or more
	-	-		8		23 ˚C or more
	-	-		9		24 ˚C or more
	-	-		10		25 ˚C or more
	-	-		11		26 ˚C or more
	-	-		12		27 ˚C or more
	-	-		13		28 ˚C or more
	-	-		14		29 ˚C or more
	-	-		15		30 ˚C or more

No.34 Input priority setting

Set to follow input to the main unit from air conditioner, fan speed controller, etc.
This function is N/A from Lossnay unit DIP-SW.

DIP-SW		Setting check	PZ-61DR-E		Setting check	Input priority setting
SW No.	Setting		Function No.	Setting Data		
N/A	-	-	34	0 (Factory setting)		Main unit input priority
	-	-		1		Individual input priority

Function settings (continued)

No.36 Outdoor temperature display setting

Set to display outdoor temperature detected by Lossnay unit thermistor or not.
This function is N/A from Lossnay unit DIP-SW.

DIP-SW		Setting check	PZ-61DR-E		Setting check	Outdoor temperature display
SW No.	Setting		Function No.	Setting Data		
N/A	-	-	36	0 (Factory setting)		N/A
	-	-		1		Display on the screen of PZ-61DR-E

No.37 Indoor temperature display setting

Set to display indoor temperature detected by Lossnay unit thermistor or not.
This function is N/A from Lossnay unit DIP-SW.

DIP-SW		Setting check	PZ-61DR-E		Setting check	Indoor temperature display
SW No.	Setting		Function No.	Setting Data		
N/A	-	-	37	0 (Factory setting)		N/A
	-	-		1		Display on the screen of PZ-61DR-E

No.38 Calculated supply air temperature display setting

Set to display calculated supply air temperature or not.
This function is N/A from Lossnay unit DIP-SW.

DIP-SW		Setting check	PZ-61DR-E		Setting check	Calculated supply temperature display
SW No.	Setting		Function No.	Setting Data		
N/A	-	-	38	0 (Factory setting)		N/A
	-	-		1		Display on the screen of PZ-61DR-E

No.39, 40 Temperature exchange efficiency setting

Set the 10 digit of temperature exchange efficiency which is used to calculate supply air temperature.
This function is N/A from Lossnay unit DIP-SW.

DIP-SW		Setting check	PZ-61DR-E		Setting check	10 digit of temperature exchange efficiency
SW No.	Setting		Function No.	Setting Data		
N/A	-	-	39	0		0
	-	-		1		1
	-	-		2		2
	-	-		3		3
	-	-		4		4
	-	-		5		5
	-	-		6		6
	-	-		7 (Factory setting)		7
	-	-		8		8
	-	-		9		9

DIP-SW		Setting check	PZ-61DR-E		Setting check	1 digit of temperature exchange efficiency
SW No.	Setting		Function No.	Setting Data		
N/A	-	-	40	0 (Factory setting)		0
	-	-		1		1
	-	-		2		2
	-	-		3		3
	-	-		4		4
	-	-		5		5
	-	-		6		6
	-	-		7		7
	-	-		8		8
	-	-		9		9

No.41 Outdoor temperature correction

Set the correction for the outdoor temperature displayed on the PZ-61DR-E screen by function No. 36 .
This function is N/A from Lossnay unit DIP-SW.

DIP-SW		Setting check	PZ-61DR-E		Setting check	The correction to thermistor detection
SW No.	Setting		Function No.	Setting Data		
N/A	-	-	41	0		-7 ˚C
	-	-		1		-6 ˚C
	-	-		2		-5 ˚C
	-	-		3		-4 ˚C
	-	-		4		-3 ˚C
	-	-		5		-2 ˚C
	-	-		6		-1 ˚C
	-	-		7 (Factory setting)		0 ˚C
	-	-		8		+1 ˚C
	-	-		9		+2 ˚C
	-	-		10		+3 ˚C
	-	-		11		+4 ˚C
	-	-		12		+5 ˚C
	-	-		13		+6 ˚C
	-	-		14		+7 ˚C

No.42 Indoor temperature correction

Set the correction for the indoor temperature displayed on the PZ-61DR-E screen by function No. 37 .
This function is N/A from Lossnay unit DIP-SW.

DIP-SW		Setting check	PZ-61DR-E		Setting check	The correction to thermistor detection
SW No.	Setting		Function No.	Setting Data		
N/A	-	-	42	0		-7 ˚C
	-	-		1		-6 ˚C
	-	-		2		-5 ˚C
	-	-		3		-4 ˚C
	-	-		4		-3 ˚C
	-	-		5		-2 ˚C
	-	-		6		-1 ˚C
	-	-		7 (Factory setting)		0 ˚C
	-	-		8		+1 ˚C
	-	-		9		+2 ˚C
	-	-		10		+3 ˚C
	-	-		11		+4 ˚C
	-	-		12		+5 ˚C
	-	-		13		+6 ˚C
	-	-		14		+7 ˚C

No.51 Automatic ventilation mode setting

Set the pattern of conditions to go into By-pass mode in automatic ventilation operation.
When setting Data is set “3” by PZ-61DR-E, function No. 52 , No. 53 , and No. 54 are available.

DIP-SW		Setting check	PZ-61DR-E		Setting check	Conditions to go into By-pass mode
SW No.	Setting		Function No.	Setting Data		
SW2-7	-	-	51	0 (Factory setting)		DIP-SW priority
	OFF (Factory setting)			1		Pattern A Indoor temperature is 16 ˚C or more Outdoor temperature is 16 ˚C or more Indoor temperature - outdoor temperature ≥ 0 ˚C
	ON			2		Pattern B Indoor temperature is 22 ˚C or more Outdoor temperature is 18 ˚C or more Indoor temperature - outdoor temperature ≥ 2 ˚C
	-	-		3		Free setting

* Pattern A is more likely to become By-pass mode than pattern B.

Function settings (continued)

Note;
The ventilation mode follows the table below.

Remote controller	Interlocked air conditioner (Mr. Slim or City Multi)	Lossnay
Energy recovery ventilation mode	Either Yes or No	Energy recovery ventilation mode
By-pass ventilation mode		By-pass ventilation mode
Automatic	Cooling/Stop	Automatic (Follows the map)
	Other than above	Always energy recovery ventilation mode

No.52 Automatic ventilation mode setting 1) Outdoor and indoor temperature gap

Set one of conditions for By-pass mode in auto ventilation operation, temperature gap between indoor and outdoor.
This function is N/A from Lossnay unit DIP-SW.
This function is available when setting Data 3 is selected at function No. 51.

DIP-SW		Setting check	PZ-61DR-E		Setting check	Indoor temperature - outdoor temperature
SW No.	Setting		Function No.	Setting Data		
N/A	-	-	52	0 (Factory setting)		0 ˚C or more
	-	-		1		1 ˚C or more
	-	-		2		2 ˚C or more
	-	-		3		3 ˚C or more
	-	-		4		4 ˚C or more
	-	-		5		5 ˚C or more
	-	-		6		6 ˚C or more
	-	-		7		7 ˚C or more

No.53 Automatic ventilation mode setting 2) The lowest outdoor temperature

Set one of conditions for By-pass mode in auto ventilation operation, minimum outdoor temperature which comes in indoor directly.
This function is N/A from Lossnay unit DIP-SW.
This function is available when setting Data 3 is selected at function No. 51.

DIP-SW		Setting check	PZ-61DR-E		Setting check	Outdoor temperature
SW No.	Setting		Function No.	Setting Data		
N/A	-	-	53	0		10 ˚C or more
	-	-		1		11 ˚C or more
	-	-		2		12 ˚C or more
	-	-		3		13 ˚C or more
	-	-		4		14 ˚C or more
	-	-		5		15 ˚C or more
	-	-		6 (Factory setting)		16 ˚C or more
	-	-		7		17 ˚C or more
	-	-		8		18 ˚C or more
	-	-		9		19 ˚C or more
	-	-		10		20 ˚C or more
	-	-		11		21 ˚C or more
	-	-		12		22 ˚C or more
	-	-		13		23 ˚C or more
	-	-		14		24 ˚C or more
	-	-		15		25 ˚C or more

No.54 Automatic ventilation mode setting 3) The lowest indoor temperature setting

Set one of conditions for By-pass mode in auto ventilation operation, minimum indoor temperature.
This function is N/A from Lossnay unit DIP-SW.
This function is available when setting Data 3 is selected at function No. 51.
When Lossnay is interlocked to Mr. Slim or City Multi indoor unit, the target temperature of the indoor unit is the lowest indoor temperature for By-pass mode

DIP-SW		Setting check	PZ-61DR-E		Setting check	Indoor temperature
SW No.	Setting		Function No.	Setting Data		
N/A	-	-	54	0		15 ˚C or more
	-	-		1 (Factory setting)		16 ˚C or more
	-	-		2		17 ˚C or more
	-	-		3		18 ˚C or more
	-	-		4		19 ˚C or more
	-	-		5		20 ˚C or more
	-	-		6		21 ˚C or more
	-	-		7		22 ˚C or more
	-	-		8		23 ˚C or more
	-	-		9		24 ˚C or more
	-	-		10		25 ˚C or more
	-	-		11		26 ˚C or more
	-	-		12		27 ˚C or more
	-	-		13		28 ˚C or more
	-	-		14		29 ˚C or more
	-	-		15		30 ˚C or more

Free By-pass setting

User can set conditions to go into By-pass mode in automatic ventilation mode by function No. 52 , No. 53 and No. 54.
Setting examples are shown below.

Example 1*

By-pass/Energy recovery ventilation map in automatic ventilation mode

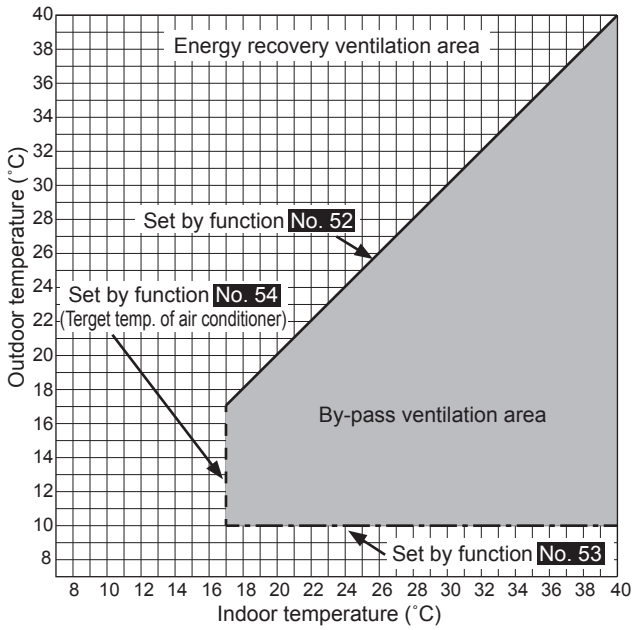

Function No.	Setting Data
52	0 (0 ˚C)
53	0 (10 ˚C)
54	2 (17 ˚C)

Function settings (continued)

Example 2

By-pass/Energy recovery ventilation map in automatic ventilation mode

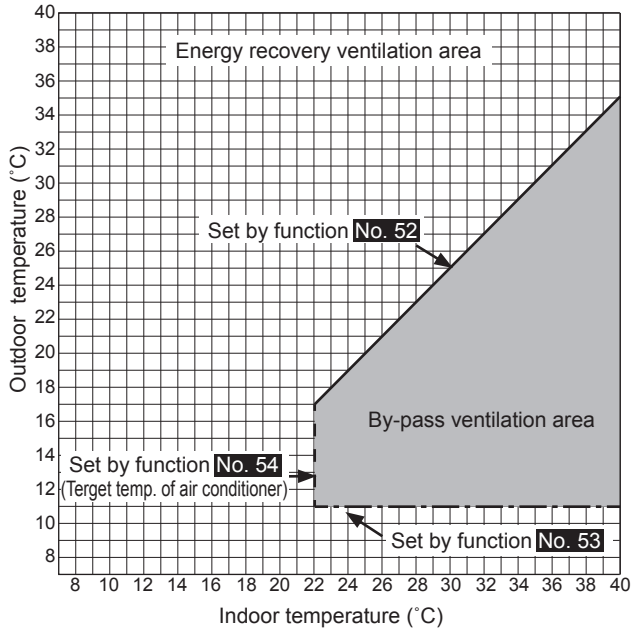

Function No.	Setting Data
52	5 (5 ˚C)
53	1 (11 ˚C)
54	7 (22 ˚C)

When the setting of Function No. 53 is low, with using the pre-heater function, the outdoor temperature may be detected as higher and the mode may change to By-pass mode even in winter. Set the setting 16 ˚C or more, or use energy recovery ventilation mode.

No.55, 56 Supply fan power up setting Exhaust fan power up setting

Use these functions when the air volume is needed to be up after installation.

Function No. 55 is for supply fan power up and function No. 56 is for exhaust fan power up.

When function No. 1 is on and fan speed already reached the maximum power, this function is N/A.

These functions are N/A from Lossnay unit DIP-SW.

DIP-SW		Setting check	PZ-61DR-E		Setting check	Supply fan power up
SW No.	Setting		Function No.	Setting Data		
N/A	-	-	55	0 (Factory setting)		N/A
	-	-		1		1 level up
	-	-		2		2 level up
	-	-		3		3 level up
	-	-		4		4 level up

DIP-SW		Setting check	PZ-61DR-E		Setting check	Exhaust fan power up
SW No.	Setting		Function No.	Setting Data		
N/A	-	-	56	0 (Factory setting)		N/A
	-	-		1		1 level up
	-	-		2		2 level up
	-	-		3		3 level up
	-	-		4		4 level up

No.57 Operation monitor output synchronized with exhaust fan or supply fan

Set operation monitor output from TM3 ⑨⑩ synchronized with supply of exhaust fan.

Also supply fan delay operation, ex. for after-heater, can be set.

DIP-SW		Setting check	PZ-61DR-E		Setting check	Operation monitor output from TM3⑨⑩
SW No.	Setting		Function No.	Setting Data		
SW2-8 SW5-2	-	-	57	0 (Factory setting)		DIP-SW priority
	2-8 OFF 5-2 OFF (Factory setting)			1		EA fan monitor output
	2-8 OFF 5-2 ON			2		SA fan monitor output * When supply fan stops during cold outdoor temp. or defrosting, output stops.
	2-8 ON (Either 5-2 ON or OFF)			3		Operation monitor output corresponds with supply fan with following. Starts the output 10 seconds after supply fan operates. Fan continues to operate supply fan for 3 min after stopping the output.

To use SW2-8 as the after-heater, observe the cautions listed in 4 on the page 11.

No.58 By-pass monitor output or Pre-heater output setting

Set By-pass monitor or Pre-heater output from TM3 ⑦⑩ synchronized with supply of exhaust fan.

DIP-SW		Setting check	PZ-61DR-E		Setting check	Output setting from TM3⑦⑩
SW No.	Setting		Function No.	Setting Data		
SW5-6	-	-	58	0 (Factory setting)		DIP-SW priority
	OFF (Factory setting)			1		By-pass ventilation operation monitor output. Corresponds to operation mode output of By-pass damper.
	ON			2		Pre-heater output. Corresponds to operation output supply fan with following. Start the output 10 seconds after supply fan starts. Fan continues to operate for 3 min after stopping the output. Lossnay starts output when outdoor temp. 0˚C or less, and stops output when detecting temp. becomes 15˚C. Lossnay stop the output every 1 hour. Error code is shown on the remote controller and stop the output in case of following. 1) TH1 detects higher than 15 ˚C within 15 minutes after the output starts. 2) TH1 detects -10 ˚C or lower, 60 minutes after the output starts.

- For heater selection, observe the cautions listed in 4 on the page 11.
- When set to auto ventilation mode while using the Pre-heater function, the outdoor temperature may be detected as higher and the mode may change to By-pass mode, even in winter.
- During pre-heater is ON, Lossnay does not go to Fan speed 1. Even remote controller displays Fan speed 1, Lossnay is operated at Fan speed 2.

Function settings (continued)

No.59 Pre-heater output setting 1) ON temperature

Set the outdoor temperature for Pre-heater output ON.
When detecting temp. becomes the setting or less, Pre-heater output from TM3⑦⑩ starts.
This function is N/A from Lossnay unit DIP-SW.

DIP-SW		Setting check	PZ-61DR-E		Setting check	Outdoor temp. for Pre-heater output ON
SW No.	Setting		Function No.	Setting Data		
N/A	-	-	59	0 (Factory setting)		0 ˚C or less
	-	-		1		-1 ˚C or less
	-	-		2		-2 ˚C or less
	-	-		3		-3 ˚C or less
	-	-		4		-4 ˚C or less
	-	-		5		-5 ˚C or less
	-	-		6		-6 ˚C or less
	-	-		7		-7 ˚C or less

No.60 Pre-heater output setting 2) OFF interval

Set the Pre-heater output interval. Output stops according to the set hours.

DIP-SW		Setting check	PZ-61DR-E		Setting check	Pre-heater output OFF interval
SW No.	Setting		Function No.	Setting Data		
N/A	-	-	60	0 (Factory setting)		1 hr
	-	-		1		2 hrs
	-	-		2		3 hrs
	-	-		3		4 hrs
	-	-		4		5 hrs

No.61 Fan speed for air volume “High” input

Set the fan speed setting when receiving “High” signal from remote controllers(e.g. remote controller of City Multi and Mr. Slim, Lossnay simple remote controller) which have High/Low or High/Middle/Low air volume.

DIP-SW		Setting check	PZ-61DR-E		Setting check	Operating fan speed
SW No.	Setting		Function No.	Setting Data		
SW2-9	-	-	61	0 (Factory setting)		DIP-SW priority
	OFF (Factory setting)			1		Fan speed 4
	ON			2		Fan speed 3

No.62 Fan speed for air volume “Low” input

Set the fan speed setting when receiving “Low” signal from remote controllers(e.g. remote controller of City Multi and Mr. Slim, Lossnay simple remote controller) which have High/Low.

DIP-SW		Setting check	PZ-61DR-E		Setting check	Operating fan speed
SW No.	Setting		Function No.	Setting Data		
SW2-10	-	-	62	0 (Factory setting)		DIP-SW priority
	OFF (Factory setting)			1		Fan speed 2
	ON			2		Fan speed 1

No.63 External fan speed input setting (0 - 10 VDC)

Set external fan speed input setting.

DIP-SW		Setting check	PZ-61DR-E		Setting check	External fan speed control using CN26
SW No.	Setting		Function No.	Setting Data		
SW2-3 SW2-6	-	-	63	0 (Factory setting)		DIP-SW priority
	2-3 OFF 2-6 OFF (Factory setting)			1		External fan speed control is N/A.
	2-3 ON 2-6 OFF			2		Refer to pattern X
	2-3 OFF 2-6 ON			3		Refer to pattern Y
	2-3 ON 2-6 ON			4		Refer to pattern Z

Lossnay changes fan speed according to input voltage to CN26.
When pattern X or Y is selected, it is not possible to change fan speed from remote controllers.
(External input has higher priority)

[Pattern X]
When the input voltage is more than 6.0 VDC, Lossnay operates at fan speed 4 (maximum air volume). Lower voltage than 6.0 VDC, Lossnay operate at weaker fan speed. (Connection example: if you use a CO_2 sensor which 0 - 10 VDC equals to 0 - 2000 ppm, 6.0 VDC equals to 1200 ppm)

[Pattern Y]
When the input voltage is more than 5.0 VDC, Lossnay operates at fan speed 4 (maximum air volume). Lower voltage than 5.0 VDC, Lossnay operate at weaker fan speed. (Connection example,:if you use a CO_2 sensor which 0 - 10 VDC equals to 0 -2000 ppm, 5.0 VDC equals to 1000 ppm)

[Pattern Z]
Lossnay changes fan speed as the table below. (Connection example: BMS (Building Management System))

Input voltage[VDC]	Fan speed	Fan speed changing from Remote controller
0 - 1.0	-	Available
1.5 - 2.5	1	Not available
3.5 - 4.5	2	Not available
5.5 - 7	3	Not available
8.5 - 10	4	Not available

When the input voltage is in-between, it will cause unstable operation.

No.100 Initialization

Set to initialize the remote PZ-61DR-E setting.
All settings which are changed by users are cancelled.

DIP-SW		Setting check	PZ-61DR-E		Setting check	Initialization
SW No.	Setting		Function No.	Setting Data		
N/A	-	-	100	0		N/A
	-	-		1		Available

Check points after installation work

After installation work, please double-check the points below. If there is any trouble, it must be done correctly.

(1) Check points - Unit installation

☐ Is the insulation wrapped around the outside ducts?	[Refer to Installing the Lossnay unit]	page 5
☐ Is the outside ducts installed correctly?	[Refer to Installation example]	page 5

(2) Check points - Wiring work

☐ Is the power supply voltage correct?	[Refer to wiring diagram]	page 7-8
☐ Is the wiring work the same as wiring diagram?	[Refer to wiring diagram]	page 7-8
☐ Is the power supply cable connected to the terminal (TM1) certainly?	[Refer to Connecting the power supply cable]	page 9
☐ Is the ground cable connected to the screw certainly?	[Refer to Connecting the power supply cable]	page 9
☐ Are the cables properly secured using the cord clip and the PG connector?	[Refer to Connecting the power supply cable]	page 9

Trial operation

After the system has been installed and before the ceiling panel is installed, make sure that wires are properly connected, then test the system's operation, referring to the operation manual for the remote controller.

1. Trial operation using the remote controllers (PZ-61DR-E)

Follow the procedure shown in the operation manual for the remote controller the functions below.

(1) Start operation.
(2) Fan speed selection.
(3) Ventilation mode selection.
(4) Stop operation.

2. Lossnay trial operation

This function can be used following situations.

- When there is no remote controller installed for operating the Lossnay.
- When heater output, malfunction monitor output, operation monitor output, and other output are connected.
- When the outdoor temperature is 8ºC or lower. (To check By-pass damper operation)

(1) Supply power to the Lossnay unit.

(2) Turn the trial operation switch (DIP-SW SW2-1) "On."

Terminal	DIP-SW	Setting	Minutes / Seconds	0 (0 10 20 30 40 50)	1 (0 10 20 30 40 50)	2 (0 10 20 30 40 50)	3 (0 10 20 30 40 50)	4 (0 10 20 30 40 50)
-	-	-	FanSpeed	STOP	4	STOP	4	
-	-	-	Ventilation mode	Bypass		Lossnay		
TM3⑦⑩	SW5-6	OFF	Bypass monitor output	OFF	ON	OFF		
		ON	Pre-heater output	OFF				ON
TM3⑨⑩	SW2-8/ SW5-2	OFF/OFF	EA fan monitor output	ON				
		OFF/ON	SA fan monitor output	ON				
		ON/OFF or ON/ON	SA fan monitor output delay operation	OFF			ON	
TM3⑧⑩	-	-	Malfunction monitor output	ON				

Error code "0900" appears on the remote controller.

(3) Check each function operating normally.

(4) Turn the trial operation switch (DIP-SW SW2-1) "Off."

3. Complete system trial operation

■ **Interlock system containing an indoor unit and/or external device**

- Use the remote controller for the indoor unit or the operating switches for the external device and confirm that the indoor unit and Lossnay are interlocked.
- If delay time has been set, check that the Lossnay operates after the delay time has passed.

■ **If MELANS System**

- Use MELANS to confirm the operation of the Lossnay.

Trial operation (continued)

4. If trouble occurs during trial operation

<table>
<tr><th>Symptom</th><th>Remedy</th></tr>
<tr><td>Will not operate even when the operation switch for the remote controller (PZ-61DR-E) is pressed.</td><td>• Check the power supply. (The specified power supply is single-phase 220-240 V 50 Hz)
• Check for a short circuit or disconnection in the transmission cable. (Check that the voltage between terminals in the transmission cables is 10 to 13 VDC for the PZ-61DR-E.)
• Check that the there is 5 cm or more separating the transmission cable from the power supply cable and any other transmission cables.
• Run the Lossnay independently using the trial operation switch (SW2-1) and check if it runs.
<table><tr><td>Lossnay runs</td><td>--></td><td>Check the signal lines</td></tr><tr><td>Lossnay doesn't run</td><td>--></td><td>Check the power supply</td></tr></table>• Check if there are three or more remote controller connected. (The maximum is two.)</td></tr>
<tr><td>When using M-NET, the operation switch of Remote Controller (PZ-61DR-E) is dead.</td><td>• Check the power supply. (Specified power supply: single-phase 220-240 V 50 Hz, wire dia. ø1.6, switch capacity
• Check if the power supply unit is connected or not, and if the power is supplied or not (For a system with Lossnay only, it is necessary to install the power supply unit.)
• Check the transmission cable for short-circuit or broken wire (Check if DC 20 - 30 V is detected between the terminals of transmission cable).
• Check if a clearance of 5 cm is secured between the transmission cable and the Power supply cable and other transmission cables.
• Run Lossnay independently to see if it operates properly or not.
<table><tr><td>Lossnay operates</td><td>--></td><td>Inspect the transmission cable</td></tr><tr><td>Lossnay doesn't operate</td><td>--></td><td>Check the power supply</td></tr></table></td></tr>
<tr><td>Does not operate even when the operation switch for remote controller for MELANS is pressed.</td><td>• Check whether or not there is a power supply unit and that the power has been turned on. (On systems with only a Lossnay, a power supply unit is required.)</td></tr>
<tr><td>Indoor unit or external device does not interlock.</td><td>• Check if the pulse input switch (SW2-2) is off. (Can be set from PZ-61DR-E)
• Check the overall cable length between the indoor unit or external device and Lossnay. (Refer to technical publications or other such documents.)
• Check the connections at the external control input terminal block (TM2).
In the case of voltage charged 12 or 24 VDC output device: Connect to external control input terminals ① and ②.
In the case of uncharged a-contact output device: Connect to external control input terminals ① and ③.
In the case of Mr. Slim (A control or K control): Connect to external control input terminals ① and ②.
• Perform the registration operation using the remote control for the air conditioner or MELANS. (Refer to the installation instructions for the remote controller for the indoor unit or MELANS.)
• Check if the delay has been set.
• Check the overall length of the transmission cable between the external device and Lossnay. (Refer to technical publications or other such documents.)
• Check if the transmission cable from the external device has come off of the external control input terminal.
<table><tr><th></th><th>Operation signal</th><th>Stop signal</th></tr><tr><td>Charged 12 or 24 VDC output device</td><td>12 or 24 VDC</td><td>0 VDC</td></tr><tr><td>Uncharged a-contact output device</td><td>Resistance: 0 Ω</td><td>Unlimited resistance Ω</td></tr><tr><td>Mr. Slim</td><td>2 to 6 VDC (pulse signal)</td><td>2 to 6 VDC (pulse signal)</td></tr></table>• Check, in the case of multiple units, whether the DIPSW SW5-10 of the Lossnay unit which is connected to the external control input terminal is set ON, and check whether the DIPSW SW5-10 of other Lossnay units are set to OFF.</td></tr>
<tr><td>Lossnay does not stop.</td><td>• Check that the trial operation switch (SW2-1) is set to off.</td></tr>
<tr><td>The inspection indicator lamp (LED 1 Green) in the control box flashes.</td><td><table><tr><td>1 flash</td><td>Fault on supply fan motor</td><td rowspan="11">Turn the power off and consult your dealer.</td></tr><tr><td>2 flashes</td><td>Fault on exhaust fan motor</td></tr><tr><td>4 flashes</td><td>Fault on OA thermistor</td></tr><tr><td>5 flashes</td><td>Fault on RA thermistor</td></tr><tr><td>6 flashes</td><td>Fault on supply fan motor (Only LGH-150/200RVX-E)</td></tr><tr><td>7 flashes</td><td>Fault on exhaust fan motor (Only LGH-150/200RVX-E)</td></tr><tr><td>8 flashes</td><td>Fault on Pre-heater capacity or relay of TM3⑦⑩</td></tr><tr><td>9 flashes</td><td>Fault on remote controller communication</td></tr><tr><td>10 flashes</td><td>Fault on function setting</td></tr><tr><td>11 flashes</td><td>Fault on power supply to remote controller</td></tr></table></td></tr>
<tr><td>The inspection indicator lamp (LED 2 Red) in the control box flashes.</td><td><table><tr><td>1 to 8 flashes</td><td>Error in M-NET communication</td><td>Turn off the power and immediately contact your dealer.</td></tr></table></td></tr>
</table>

■ When an inspection number blinks on the remote controller, follow the procedures shown in the installation and operating manuals provided with the remote controller.

■ If the remote controller is not used, operate after approximately 2 minutes of turning on the power for the Lossnay.

bpc Ventilation