Installation and Maintenance

MRXBOX95-WM1 (Standard Unit)
MRXBOX95-WM1-OH (Opposite hand Unit)
MRXBOX95AB-WM1 (Standard Unit)
MRXBOX95AB-WM1-OH (Opposite hand Unit)

Mechanical Ventilation Units with Heat Recovery for Wall Mounting

The EMC Directive 2014/30/EU
The Low Voltage Directive 2014/35/EU

1.0 Introduction

The WM1 wall mounted range of units is designed to provide mechanical supply and extract ventilation with heat recovery.
The unit is fitted with two independent fans. Each fan has full speed control for background and boost ventilation rates.
To recover heat from the extract air the heat exchanger block is utilised. The heat exchanger can recover up to 95% of the normally wasted heat.

If the unit has integral automatic summer bypass (AB models only) The bypass damper shall open automatically via a wax actuator allowing the air to bypass the heat exchanger to deliver fresh filtered air during the warmer months.

IMPORTANT

The unit must remain switched on at all times to maintain ventilation within the dwelling. Turning the unit off will cause long term damage to the unit and building fabric.

This appliance is not intended for use by persons (including children) with reduced physical, sensory or mental capabilities, or lack of experience and knowledge, unless they have been given supervision or instruction concerning the use of the appliance by a person for their safety. Children should be supervised so that they do not play with the appliance.

Figure 1. Airflow through unit (Standard unit).

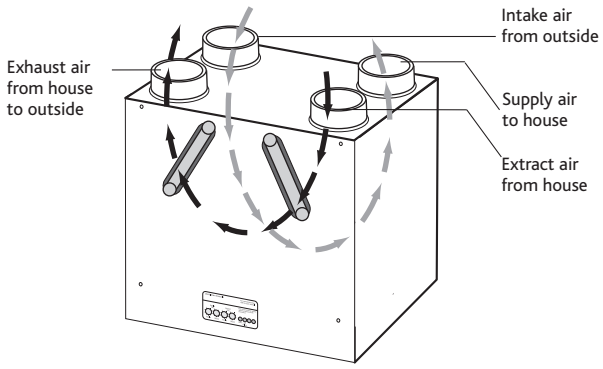

Figure 2. Airflow through OH unit (Opposite hand unit).

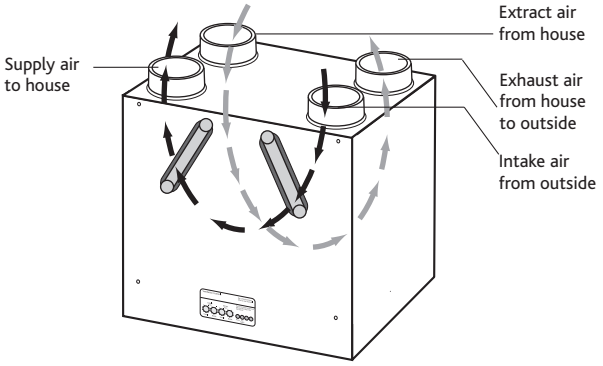

2.0 Installation

Installation must be carried out by competent personnel in accordance with the appropriate authority and conforming to all statutory governing regulations. All mains wiring must be in accordance with the current I.E.E. Regulations, or the appropriate standards. Ensure that the mains supply (Voltage, Frequency and Phase) complies with the rating label.

Please note a clear working space is required around the installed unit to allow the cover to be removed and provide sufficient access for maintenance such as filter change.
Please allow a minimum of 280mm in front of the unit.

The fan must be installed indoors, on a suitable wall away from direct sources of frost, heat, water spray or moisture generation.
For a vibration-free result the unit must be mounted to a solid wall.

2.1 Wall Mounting the MVHR Unit

The unit is designed for wall mounting, only on a solid wall. A gypsum block or stud/plasterboard wall will not suffice.

1. One part of the mounting bracket (supplied) should be offered up to the wall, ensuring it's located horizontally. Mark the fixing points through the pre drilled holes in the bracket and install with screws (by others), ensuring the interlock side is at the top, (fig. 3).

Figure 3. Fixing the mounting bracket to the wall.

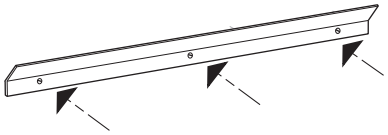

2. Install the unit on the wall by ensuring the bracket fixed to the rear of the unit interlocks over the wall mounted bracket (fig. 4).

Figure 4. Mounting the unit on the wall mounted bracket.

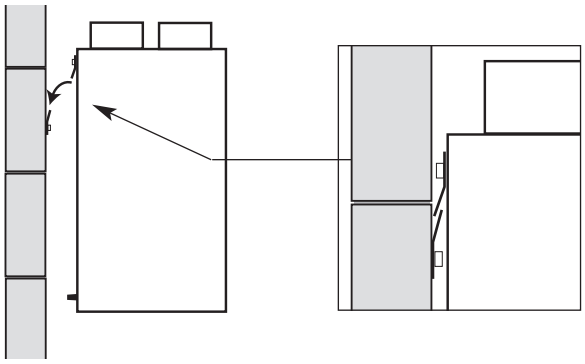

Note: Care must be taken to ensure the unit is installed true in all 3 dimensions. Failure to do so may result in overflow from the internal condensation drip tray.

(See overleaf for wall mounting option details).
Note: the unit is not recommended for loft mounting.

Nuaire Limited Western Industrial Estate Caerphilly United Kingdom CF83 1NA
T: 029 2085 8400 F: 029 2085 8444 E: info@nuaire.co.uk W: www.nuaire.co.uk

09. 06. 16. Leaflet Number 671684

2.2 Option 1: Wall Mounting

The MVHR unit fixed to a solid wall construction using the mounting bracket provided.

Figure 5. Typical example of a cupboard mounted unit (Standard unit) fixed to a block work wall.

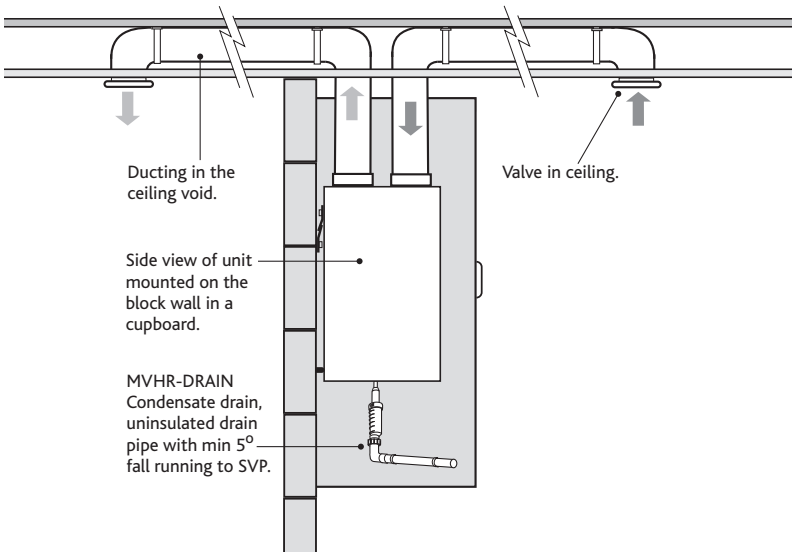

Option 2: Wall Mounting

If it is not practical to use a solid wall, the MVHR unit should be fixed to a stud partition with a 25mm minimum thickness MDF panel solidly fixed behind the plasterboard.

If fixing to a stud wall the MDF panel should extend, width wise, over a minimum of 3 vertical studs with centres of no more than 400mm.

Add additional vertical supports if necessary. Height wise, ideally, the MDF panel should extend from floor to ceiling but as a minimum should be a least 2m high.

Fix the mounting bracket to the wall (as fig 3) and use the wall mounted bracket to mount the unit on (as shown in fig 4).

Figure 6. Typical example of a cupboard mounted unit (Standard unit) fixed to a stud partition with the MDF panel fixed behind the plasterboard.

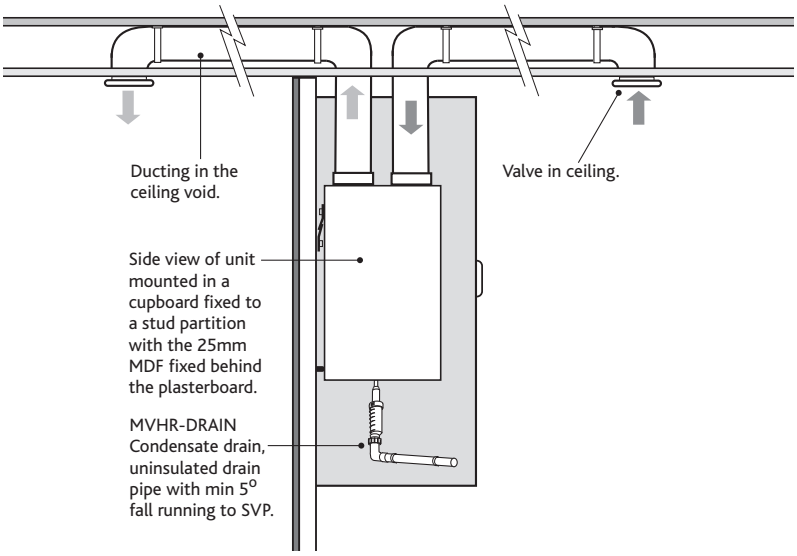

2.3 Condensate Drain

1. The condensate must be discharged under a water level in a U-trap drainpipe or an alternative drain method which acts as an airlock.
2. This condensate discharge connection is suitable for 21.5mm dia. overflow pipe. Solvent cement should be used to make the joint.
3. If using a U-trap please ensure the U-trap has been filled to a suitable level of water to avoid any air locks.
4. If the condensation pipe is fitted in an unheated space the pipe should be in insulated to prevent freezing.

Nuaire recommend MVHR-DRAIN be used as the primary condensate take-off. (see figure 8b and 8C.

Figure 7a. Wet option. Condensate pipe connection to unit and a typical example of a "U" trap drainpipe. **(Standard configuration only).**

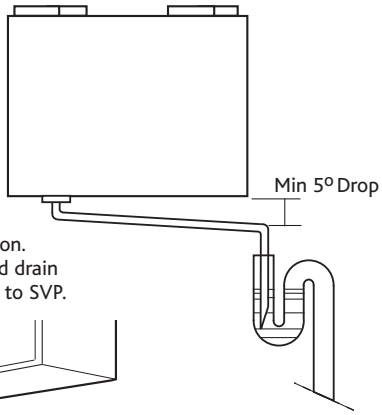

Figure 7b. MVHR-DRAIN option. Condensate drain, uninsulated drain pipe with min 5º fall running to SVP.

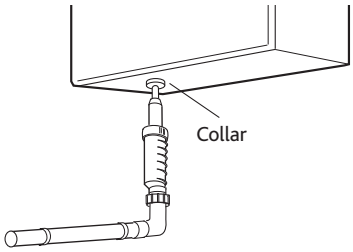

Figure 7c. **IMPORTANT: When using a "T" Piece to connect the CONTRAP drainage and the MVHR drain pipework the MVHR drain must always be fitted before the "T" Piece to prevent condensate from feeding back into the MVHR system.**

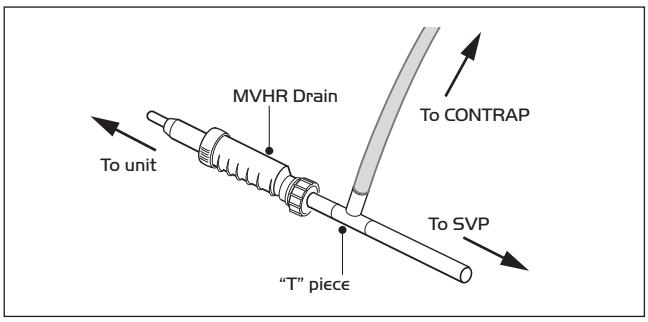

2.4 Extract/input areas

The unit is designed to extract air from all wet rooms e.g. bathroom, kitchen, en-suite, utility room (with sink).
WC's do not need to be ventilated if openable windows are fitted.

Supply air should be to all habitable rooms e.g. bedrooms and lounge. Extract / input grilles should be adjustable valve types (not supplied). External grilles to have a minimum free area of 12,250 sq mm.

2.5 Ducting

Before commencing ducting installation reference should be made to building regulations document "Domestic ventilation compliance guide". This document supports ADF2010 and details installation, testing and commissioning of all ventilation systems.

It is recommended that rigid ducting be used at all times.
Flexible ducting has a very high resistance and it is impossible to calculate how much resistance will be on a system if used.

If used the flexible ducting must be kept to a minimum and should always be pulled taut. A maximum of 300mm should be used on each leg.

To prevent condensation on the outside of the outside air inlet duct and the air outlet duct from the unit, these ducts should be insulated.

Ducting must be installed in such a way that resistance to airflow is minimised. Bends should be kept to a minimum.

A minimum distance of 300mm between the appliance and any bends in ductwork is recommended.

Ideally 150mm diameter or 204 x 60mm rectangular ducting should be used. (Refer to dwelling design drawing, figure 9a and 9b on page 5 for further information).

Ducting joints must be sealed with silicone type sealant and shall be adequately and reliably fixed to the appliance.

2.6 Ventilation flow rates

Table 1.

ADF 2010 – Extract ventilation rates

Room	Min high rate	Min low rate
Kitchen	13 l/s	Total extract rate should be at least the whole dwelling ventilation rate given in table 2.
Utility room	8 l/s	
Bathroom	8 l/s	
Sanitary accommodation	6 l/s	

Table 2.

Whole dwelling ventilation rates

	Number of bedrooms in dwelling				
	1	2	3	4	5
Whole dwelling ventilation rate l/s [1, 2]	13	17	21	25	29

Notes:

1, **In addition, the minimum ventilation rate be should be not less than 0.3 l/s per m^2 of internal floor area.**
(This includes all floors, e.g. for a two-story building add the ground and first floor areas).

2, **This is based on two occupants in the main bedroom and a single occupant in all other bedrooms. This should be used as the default value. If a greater level of occupancy is expected add 4 l/s per occupant.**

IMPORTANT

Any air intake terminal MUST be installed in accordance with the appropriate regulation.

As a guide, the BS5440 series of British Standards deals with this issue and currently states that an air intake must be at a minimum distance of 300mm from a gas boiler balanced flue.

Installers are advised to be aware of the requirements of this standard when installing 'through the wall' supply air ducting.

2.7 ADF 2010 Ventilation Calculations Design of MVHR Systems

The MVHR system has been sized for the winter period. Additional ventilation may be required during the warmer months and it has been assumed that the provisions for purge ventilation (e.g. openable windows) could be used.

Step 1: For any design air permeability, determine the whole dwelling ventilation supply rate **from Table 2.**

As an alternative where the design air permeability is intended to be leakier than (>) $5m^3/(h.m^2)$ 50 Pa, allow for infiltration for all dwelling types by subtracting from the whole dwelling ventilation supply rate **from Table 2**; 0.04 x gross internal volume of the dwelling heated space (m^3).

Step 2: Calculate the whole dwelling extract ventilation rate by summing the individual room rates for 'minimum high rate' **from Table 1.**

(For sanitary accommmodation only, as an alternative, the purge ventilation provisions given in ADF 2010 can be used where security is not an issue. In this case 'minimum high extract rate' for the sanitary accommodation should be omitted from the step 2 calculation).

Step 3: The required airflow rates are as follows:

- the maximum whole dwelling extract ventilation rate (e.g. boost) should be at least the greater of step 1 and step 2.
  Note that the maximum individual room extract rate should be at least those given **in table 1.** for minimum high rate.
- the minimum air supply rate should be at least the whole building ventilation rate found in step 1.

For Scotland refer to BRE Digest 398.

For further information refer to "Domestic Ventilation Compliance Guide" www.planningportal.gov.uk/buildingregulations/approved documents/partl/compliance

3.0 Dimensions

Figure 8.

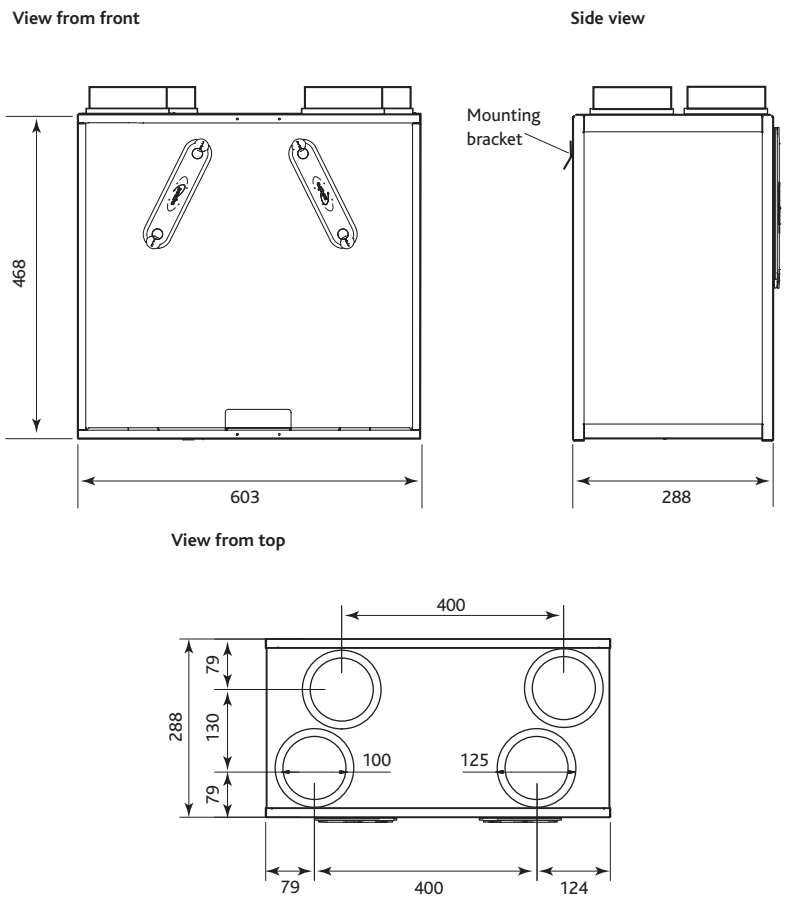

4.0 Ducting Arrangements - Standard Configuration

Figure 9a. Typical ducted arrangement for a wall mounted unit using circular ducting.

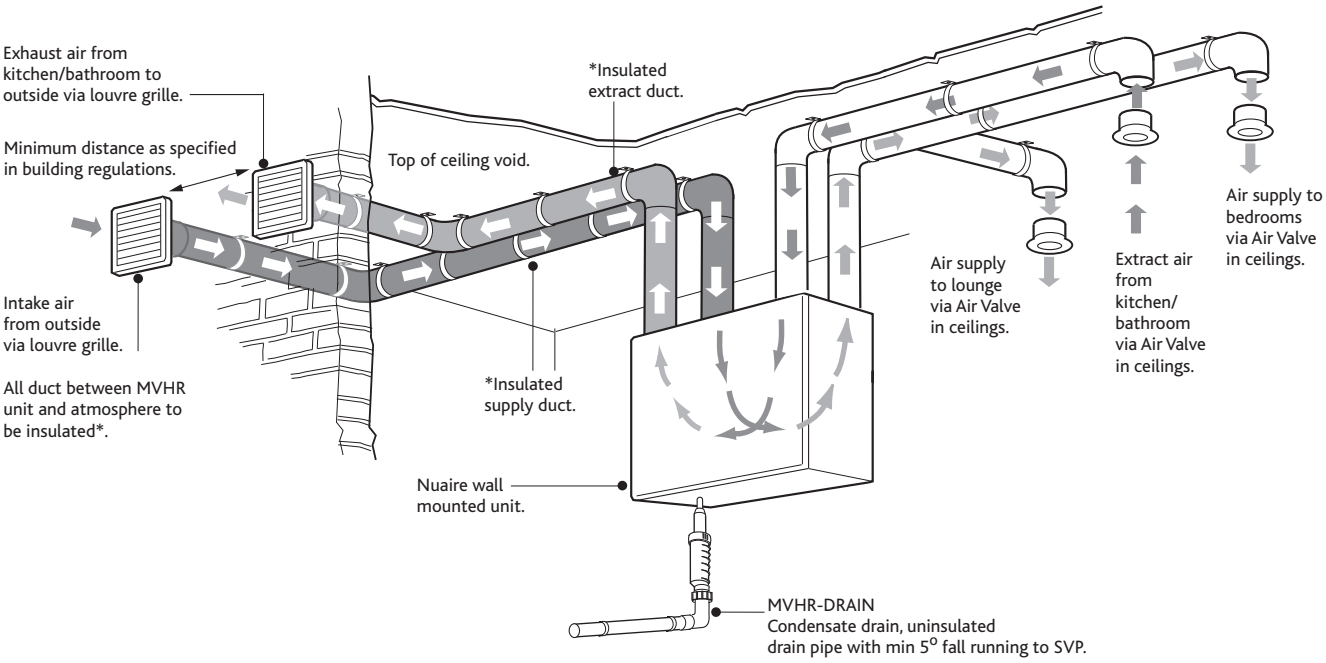

Figure 9b. Typical ducted arrangement for a wall mounted unit using rectangular ducting.

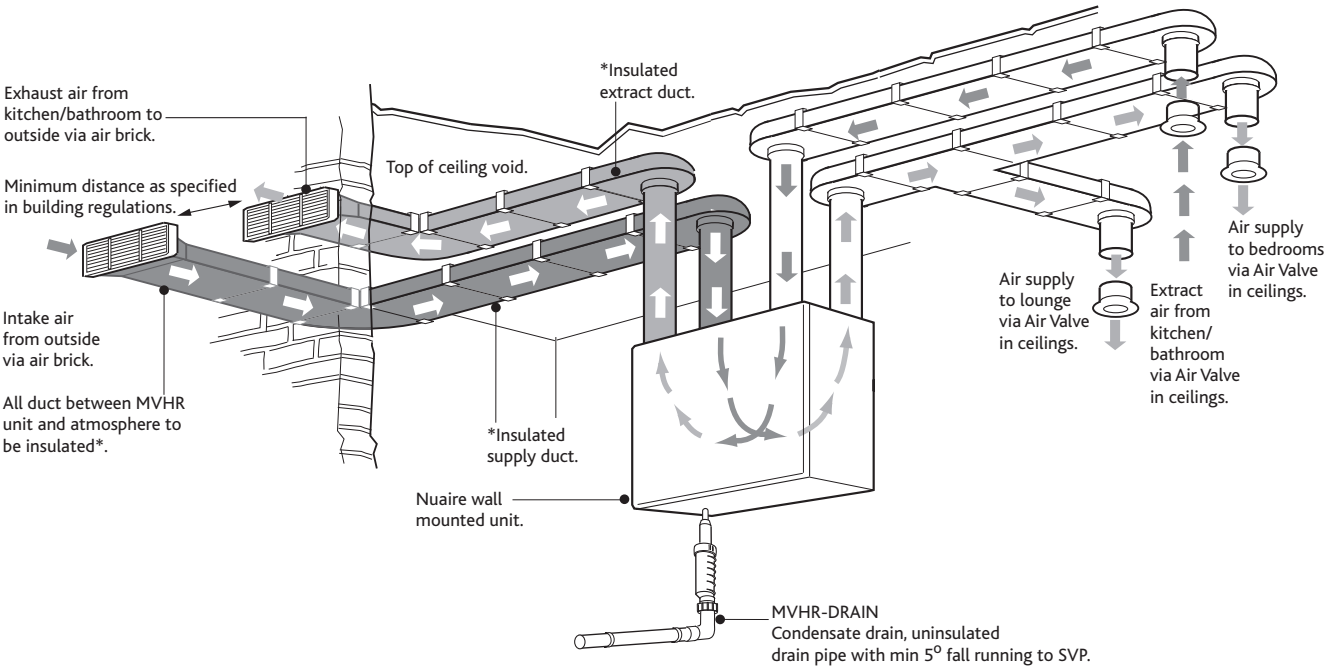

ALSO FROM NUAIRE -

New ductmaster range of thermal ducting, an all-in-one insulated ducting system. (see installation document 671620).

5.0 Electrical Connection

IMPORTANT

For good EMC engineering practice, any sensor cables or switched live cables should not be placed within 50mm of other cables or on the same metal cable tray as other cables.

Please note: the electrical connection of the unit must be be carried out by a qualified electrician.

The unit is supplied with a flexible cord for connection to the mains supply.

Electrical details:-

Voltage: **240V 1ph 50Hz**

Consumption: **75W - 0.6 Amp**

Fuse rating: **3 Amp**

NOTE This unit must be earthed.

The four core cable from the mains power supply should be connected to a fixed wiring installation, via a fused isolator, in accordance with current IEE wiring regulations.

5.1 Optional Connections

Ecosmart control (see figure 10) The IDC plug-in connectors are provided for the connection of compatible sensors.

NOTE: Do not run the data cable in the same conduit as the mains cable and leave a 50mm separation with any power cables.

Figure 10.

Note: Wiring is for reference purposes only as the connections in fig. 10 are factory fitted.
The unit is pre-wired with a 2 metre fly lead.

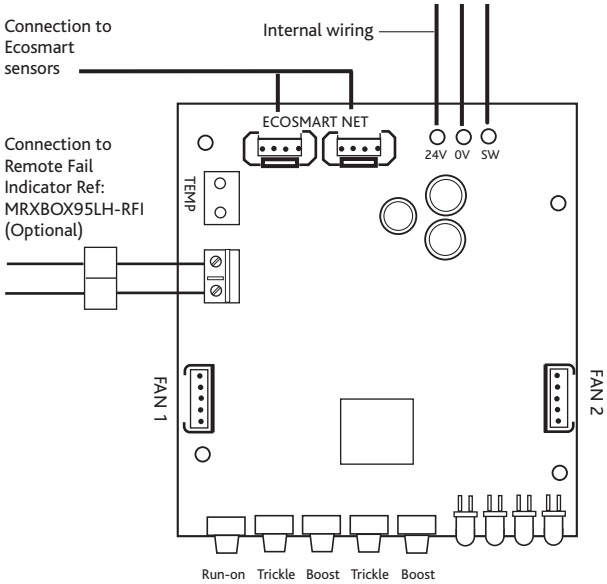

Unit serving kitchen and bathroom

Figure 11.

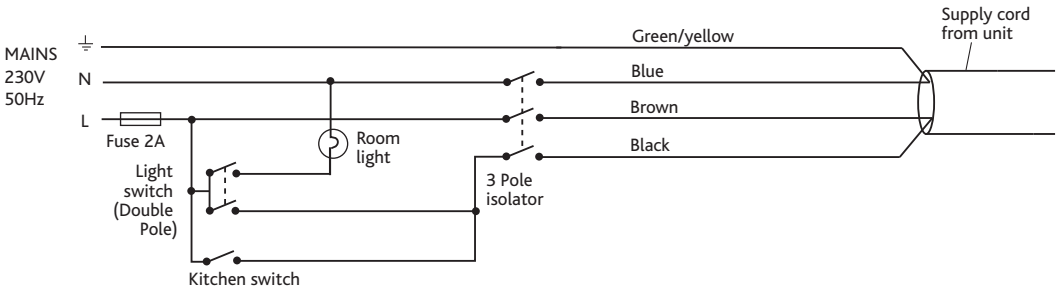

Unit serving kitchen and two bathrooms

Figure 12.

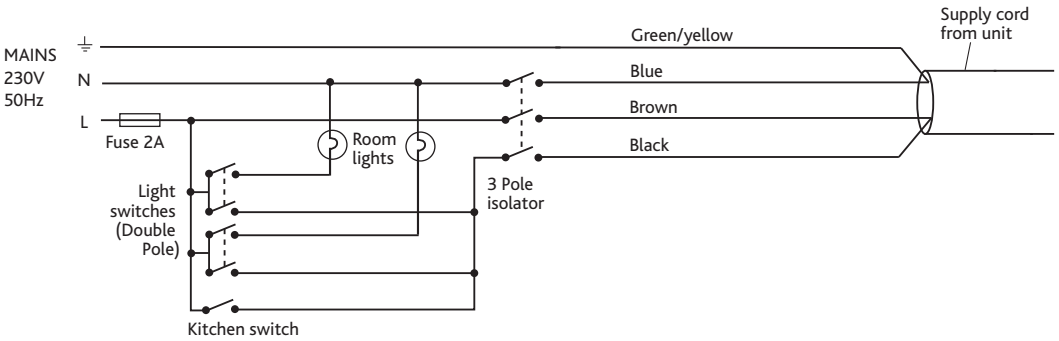

5.2 Optional Controls **For further information contact Nuaire on 029 2085 8400.**

6.0 Commissioning

IMPORTANT

The filters fitted inside the unit are protected with a plastic film. Prior to commissioning remove the covers (figs 14/15), take off the film and replace.

1. For the required air flow rates please refer to the design specification for the property, follow 2.4, or refer to building regulations ADF 2010.
2. The unit is supplied with independent control for both normal and boost airflows. (see fig. 13).
3. Correct commissioning is essential to ensure the ventilation air flowrates are met. It also ensures the unit is not over ventilating and causing excessive power consumption.
4. Commissioning should be carried out in accordance with building regulations document "Domestic ventilation compliance guide". **www.planningportal.gov.uk/building regulations/approved documents/partf/associated**
   A calibrated moving vane anemometer and hood will be required to carry out commissioning.
5. Adjustment valves should be locked in place to prevent further adjustment.
6. Once commissioned the home owner / tenant should be informed that the unit should not be adjusted as it will have a detrimental effect on the indoor air quality and could result in condensation and mould growth. The label covering the control has an adhesive panel which should be removed post commissioning to prevent tampering.
7. The trickle flow rate is limited to never exceed the boost rate, when commissioning the boost rate should always be set first.

Figure 13. Detail of unit control on front panel.

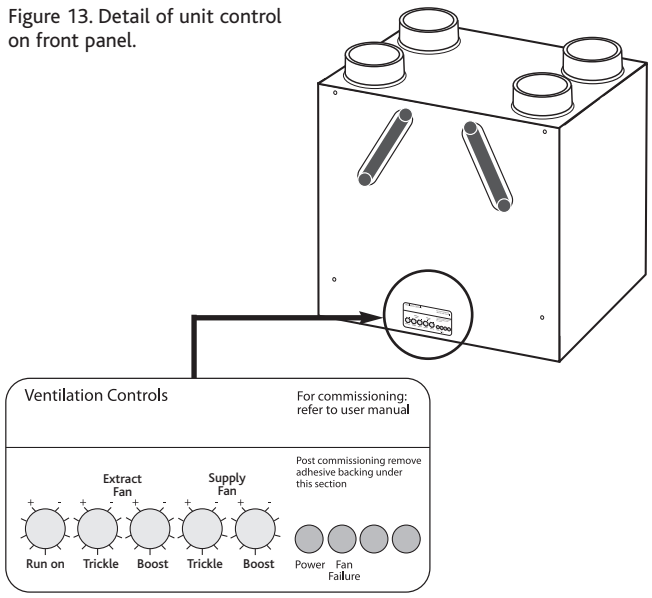

7.0 Status Indication

The status of the unit is indicated by a series of LED's on the front cover. The varients are listed below.

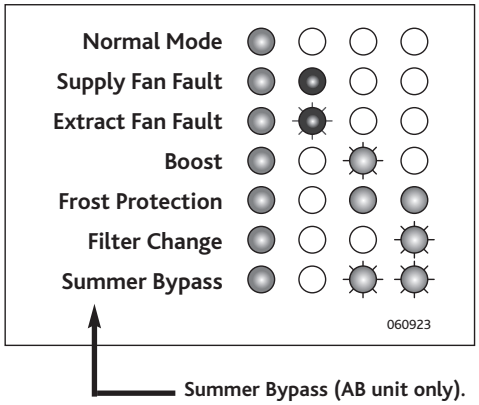

8.0 Thermal Bypass (Non AB models)

In the event of excessive outside temperatures, and to help prevent over-heating, the supply fan will automatically reduce to a trickle speed. Under these circumstances additional ventilation measures may be required e.g. open windows or trickle vents (if fitted).

9.0 Maintenance/Cleaning

IMPORTANT

Isolation - Before commencing work make sure that the unit, switched live and Nuaire control are electrically isolated from the mains supply and switched live supply.

We recommend that the two G3 fiters are inspected after 6 months, and replaced every 12 to 18 months. The filters can be removed from the unit by removing the two filter covers on the front panel of the unit. Take hold of the two circular tabs either end of the filter covers and pull out.

The filter can now be extracted by pulling the removal loop on the front edge of the filter. Once the filters have been inspected return or replace them as necessary. Inspect the heat exchanger every 5 years. Generally check for damage and security of components. Refit cover.

Figure 14. Removing the two filter covers on the front panel of the unit.

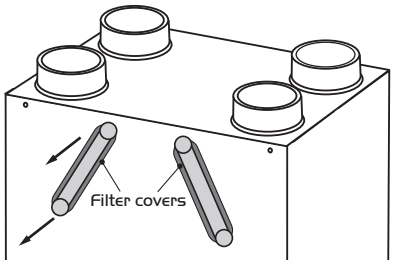

Figure 15.The filters can be removed by pulling on the black tab on the visible end of the filters.

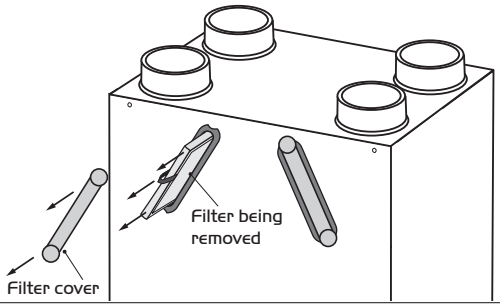

10.0 Replacement of Parts

Should any component need replacing Nuaire keep extensive stocks for quick delivery. Ensure that the unit is electrically isolated, before carrying out any work.
Note: The supply cable must be replaced by an electrically competent person.
When ordering spare parts, please quote the serial number of the unit and the ARC number of the purchase if possible.
(This information will be available on the fan label).

11.0 Warranty

The 5 year warranty starts from the day of delivery and includes parts and labour for the first year and parts only for the remaining 4 years. This warranty is conditional on planned maintenance being undertaken.

12.0 Service Enquiries

Nuaire can assist you in all aspects of service. Our Technical Support department will be happy to provide any assistance required.

Technical Support
on 029 2085 8400

Installation Guide and Checklist

Mechanical Ventilation with Heat Recovery

(Version – 11 February 2011)

The Electric Heating and Ventilation Association have developed this guidance and checklist document in partnership with the Residential Ventilation Association (a HEVAC association), BRE and EST.

NOTE: This guide and checklist has been superseded for dwellings assessed under 'The Building Regulations 2010', specifically SAP 2009 and Approved Documents L and F. Completion of this document is therefore only required for dwellings assessed by SAP 2005.

Customer Details
Customer Name:
Address:
Telephone Number:
Date of Installation:
Name of Lead Contractor:
Design Project Number:

It should be noted that this guidance is not intended to replace product manufacturer installation instructions; it is a generic addition which defines good practice. Installers are advised to complete this form for each installation and keep a copy to provide to Building Control Officers in case requested.

Introduction

This document is to be used in support of the SAP Appendix Q scheme which provides tested performance values for MVHR products.

Note that all checklist items must be answered YES in order for the SAP Appendix Q test figures to be used in 'As built' SAP calculations. If any checklist items are answered NO then SAP default figures must be used. Systems must be designed by a manufacturer designer and sized correctly to qualify for SAP Appendix Q figures.

SECTION 1: INSTALLATION GUIDANCE

1. Ductwork Installation	Decision Yes, No or N/A
Have the ducts been installed with as little air resistance and leakages as possible (flexible ducts should be avoided)? Note: Refer to HVCA DW/143 document 'A Practical Guide to Ductwork Leakage Testing' for detailed guidance on air tightness. Rigid plastic ducting is recommended and flexible duct should only be used in very short lengths and mainly just to connect the ductwork to the units/diffusers or to overcome particular obstructions.	
If flexible ducting has been used, has it been pulled taut to minimise system resistance?	
Has the number of duct bends been minimised to ensure adequate air flow and least resistance? Bends should have a minimum radius at least the same as the diameter of the ducting used? Refer to Figure 1 if using flexible ducting	
Have the fans and ducting placed in unheated voids been insulated to reduce the possibility of condensation forming (see notes below)? Note: Ducts should be insulated with the equivalent of at least 25mm of insulating material with a thermal conductivity of 0.04W/mK. Where a duct rises vertically it may be necessary to fit a condensation trap in order to prevent backflow of any moisture in the product. Insulation should be applied to both warm and cold air ducts. Cold air ducts should be wrapped additionally with a vapour barrier outside the insulation. Ducts with cold air running in warm environments will condense on the outside of the duct.	
Have recommended duct jointing collars and components been used to ensure appropriate duct performance (duct runs should be as air tight as possible)? Note: All the joints should be sealed correctly either using duct tape or silicon.	

Figure 1 Ductwork Visual Guide

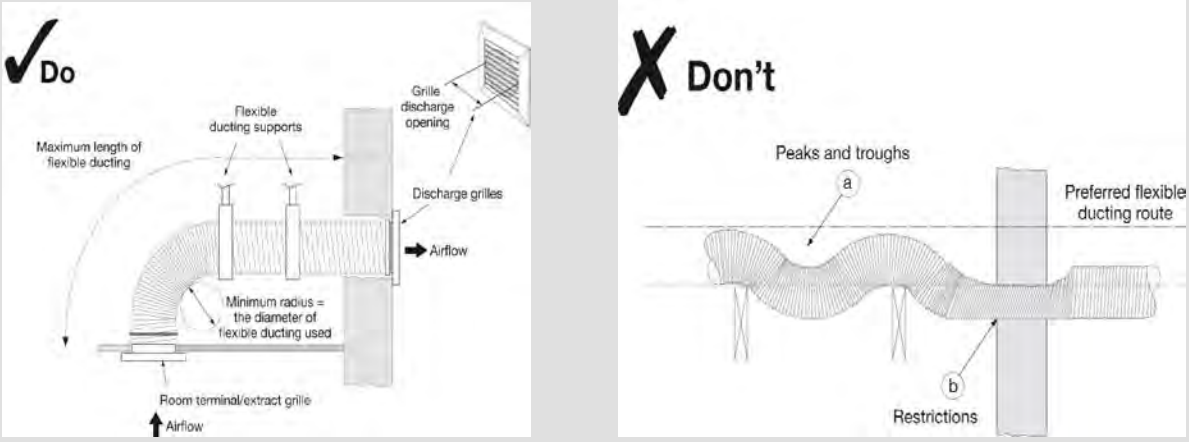

Source: Approved Document F (England & Wales) 2006

2. Unit Fixing	Decision Yes, No or N/A
Has the heat recovery unit been effectively insulated? Note: If the unit is not pre-insulated then ensure additional insulation is installed around the unit to minimise heat loss	
Has the heat recovery unit been fixed to a stable element of the building fabric (e.g. wall or floor) using manufacturer recommended/supplied fixing brackets?	
Has the condensation drain been fitted and the pipe insulated?	
Have approved acoustic/anti-vibration mountings been used? Note: Special attention is needed to avoid transmission and stress to duct joints	
Has the unit been installed in a position that will permit access for maintenance purposes?	
Have all grilles or ductwork that penetrate the building's air barrier, as identified in the construction drawings, been sealed to ensure continuity of the air barrier?	

Figure 2 Sample Mounting Positions

3. Electrical Connection	Decision Yes, No or N/A
Has the rating label been verified to establish suitability for the installation strategy and whether an earth is required (e.g. voltage, class I or II product status)?	
Has a local isolator been provided to enable the unit to be isolated for maintenance purposes?	
Has the unit been fused in accordance with its power rating?	

SECTION 2: COMMISSIONING GUIDANCE

1. System Balancing & Calibration	Decision Yes, No or N/A
Has the air flow been checked using a proprietary device such as an anemometer (recommended)?	
Have the controls been set following a defined process? Refer to figure 3 flow diagram	
Have all distribution grilles been locked where possible to minimise unapproved occupant adjustment?	

Figure 3

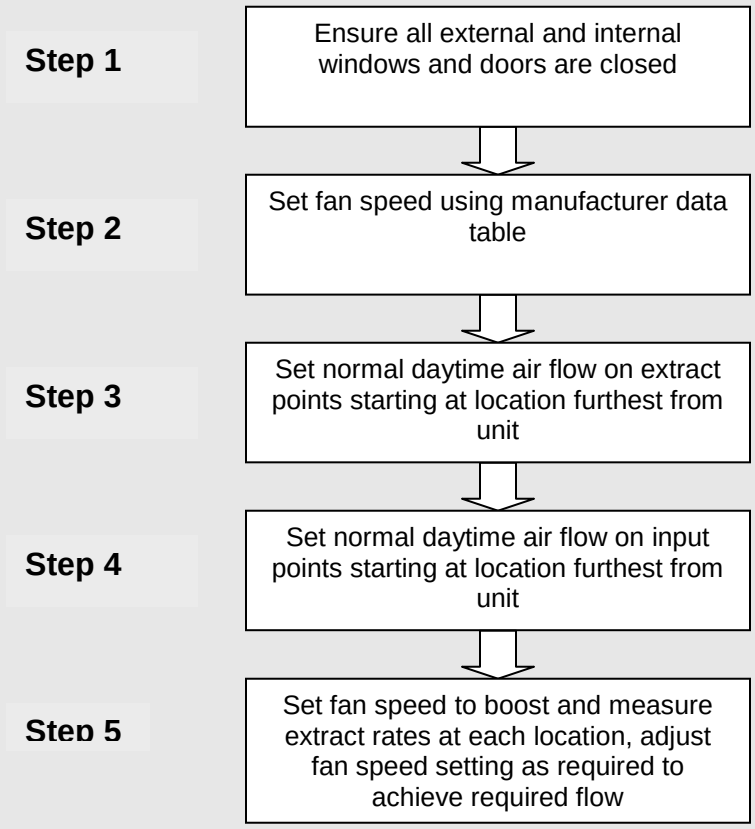

2. Handover and Control/Maintenance Advice	Decision Yes, No or N/A
Has the customer been supplied with suitable documentation detailing maintenance and operational requirements?	
Has the customer been advised that opening windows is not recommended during normal use in order to ensure the energy efficient operation and performance of the balanced system?	
Has the customer been advised not to seal natural air flows from room to room (e.g. avoid door seals and thick pile carpets)	
Has the customer been advised not to alter settings post-commissioning?	
Has the customer been advised to clean the filters as explained in the manufacturer's instructions?	

BPC Ventilation Ltd
8 Redlands Road
Larne
BT40 1AX

T: 028 2827 5150

E: info@bpcventilation.com

W: www.bpcventilation.com